CATALOGUE

CAMOZZI
Automation

HANDLING AND VACUUM

WELCOME TO CAMOZZI AUTOMATION

Camozzi Automation offers range of products including components, systems and technologies for the industrial automation sector, the control of fluids – both liquids and gases – and for applications dedicated to the transportation and health industries.

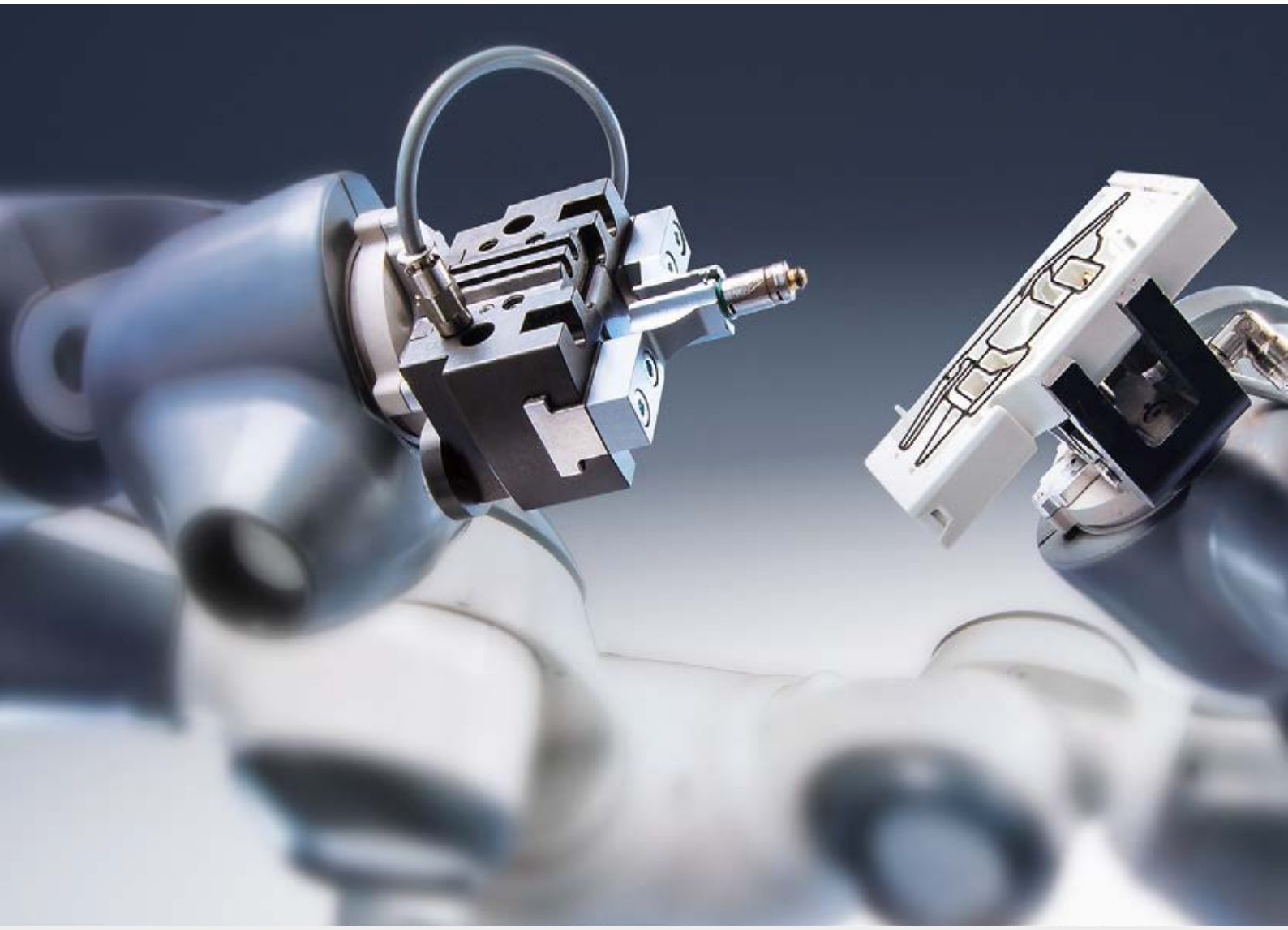

Contacts

Camozzi Automation S.p.A.
Società Unipersonale
Via Eritrea, 20/I
25126 Brescia
Italy
Tel. +39 030 37921
www.camozzi.com

Customer Service
Tel. +39 030 3792790
service@camozzi.com

Export Department
Tel. +39 030 3792262
sales@camozzi.com

CAMOZZI
Automation

Our catalogues

Pneumatic actuation

1 Cylinders according standards
2 Compact cylinders
3 Stainless steel cylinders
4 Guided cylinders
5 Cylinders not according standards
6 Rotary cylinders
7 Rodless cylinders
8 Proximity switches
9 Clamping elements and shock absorbers

Fieldbus and multipole systems

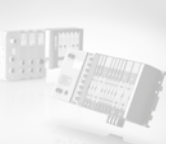

1 Valve islands
2 Multi-serial modules

Electric actuation

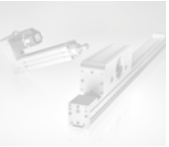

1 Electromechanical cylinders
2 Electromechanical axes
3 Drives
4 Motors

Proportional technology

1 Proportional valves
2 Proportional regulators

Handling and vacuum

1 Grippers
2 Suction pads
3 Ejectors
4 Vacuum accessories
5 Vacuum filters

Air treatment

1 Series MX Modular FRL Units
2 Series MC Modular FRL Units
3 Series MD Modular FRL Units
4 Series N FRL Units
5 Pressure regulators
6 Pressure switches and vacuum switches
7 Accessories for air treatment

Valves and solenoid valves

1 Directly and indirectly operated 2/2, 3/2 solenoid valves
2 Solenoid valves, pneumatic valves
3 Mechanical and manual valves
4 Logic valves
5 Automatic valves
6 Flow control valves
7 Silencers

Pneumatic connection

1 Super-rapid fittings
2 Rapid fittings
3 Universal fittings
4 Fittings accessories
5 Quick-release couplings
6 Tubing, spirals and accessories

General index

1 Grippers

2 Suction pads

3 Ejectors based on Venturi principle

4 Accessories

5 Filters

Appendix

Alphanumeric index

Series CGA angular grippers

Magnetic
Sizes: ø 10, 16, 20, 25, 32 mm

- Compact design
- Flexible mounting
- Optional mounting adaptors

For an easier installation the gripper can also be equipped with an optional installation adaptor mod. C-CGP (female) or L-CGP (male).

Series CGA angular grippers are available in 5 different sizes. The gripper opens and closes at angles between -10° and +30°. The proximity switches can be inserted in the U-shaped grooves on the body.
Grippers Series CGA have mounting holes on three sides which provide flexibility in installation.

GENERAL DATA

Model	CGA-10; CGA-16; CGA-20; CGA-25; CGA-32
Bore sizes	Ø 10; Ø 16; Ø 20; Ø 25; Ø 32
Type of operation	double-acting
Operating pressure	1.5 ÷ 7 bar
Operating temperature	0 ÷ 80°C
Max. operating frequency	180 cycles/min
Lubrication	lever section - lubrication required on sliding section
Grip moment - closed M (Ncm)	1,6xP 8xP 17xP 34xP 61xP P = operating pressure (bar)
Grip moment - open M (Ncm)	2,6xP 11xP 23xP 43xP 81xP
Effective gripping force F (N)	F = M/L x0,85 L = distance of gripping point (cm)
Length of la. gripping point L (cm)	3,0 4,0 6,0 7,0 8,5
Weight (g)	Ø 10 = 40 Ø 16 = 100 Ø 20 = 200 Ø 25 = 330 Ø 32 = 540
Lever open / closed angles	-10°÷ +30°
Port sizes	M5 (CGA-10 M3)
Magnet	magnet for proximity sensors in piston
Fluid	filtered air, without lubrication. If lubricated air is used, it is recommended to use oil ISOVG32. Once applied the lubrication should never be interrupted.

CODING EXAMPLE

CGA	-	20

CGA	SERIES	PNEUMATIC SYMBOL PNZ1
20	SIZES: 10 = ø 10 mm 16 = ø 16 mm 20 = ø 20 mm 25 = ø 25 mm 32 = ø 32 mm	

PNEUMATIC SYMBOLS

The pneumatic symbols which have been indicated in the CODING EXAMPLE are shown below.

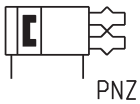

PNZ1

CLOSING GRIPPING FORCE - CHARACTERISTICS

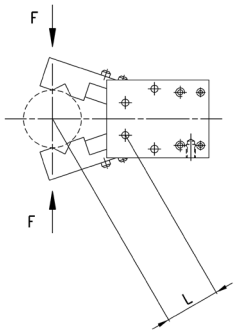

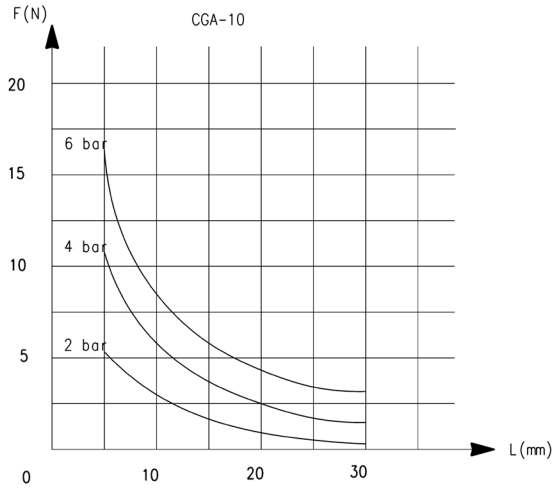

L = Length of gripping point
F = Gripping force

L = Length of gripping point
F = Gripping force

CLOSING GRIPPING FORCE - CHARACTERISTICS

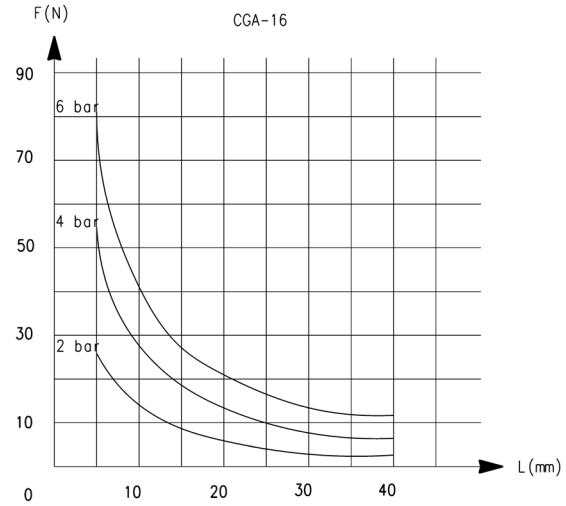

L = Length of gripping point
F = Gripping force

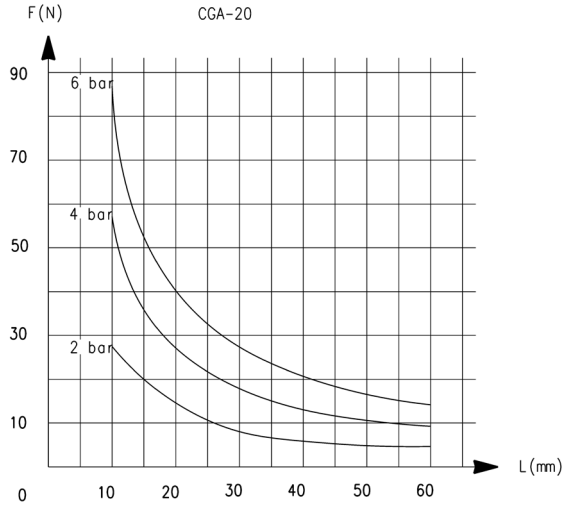

L = Length of gripping point
F = Gripping force

CLOSING GRIPPING FORCE - CHARACTERISTICS

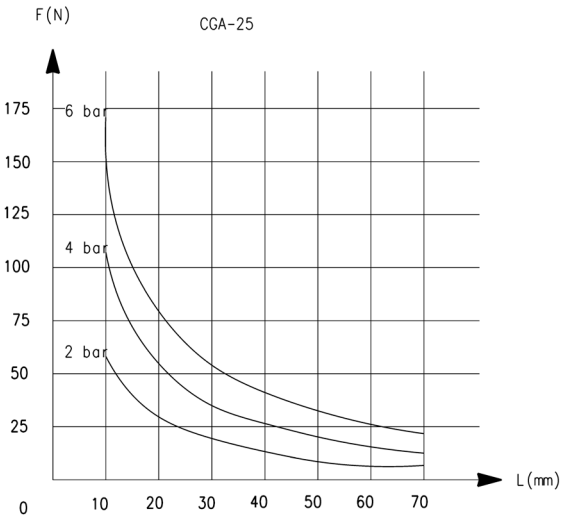

L = Length of gripping point
F = Gripping force

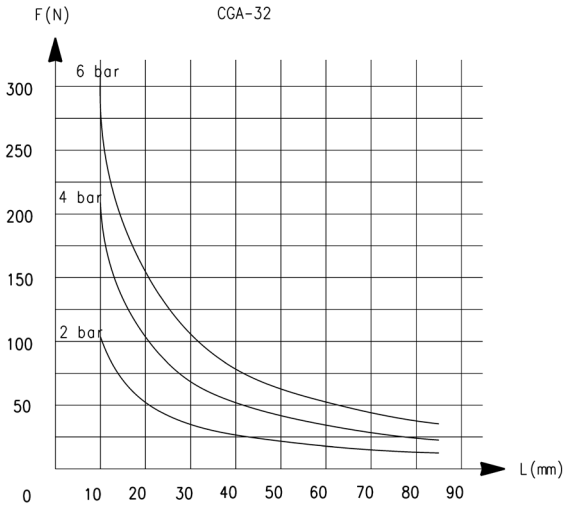

L = Length of gripping point
F = Gripping force

Angular grippers Series CGA

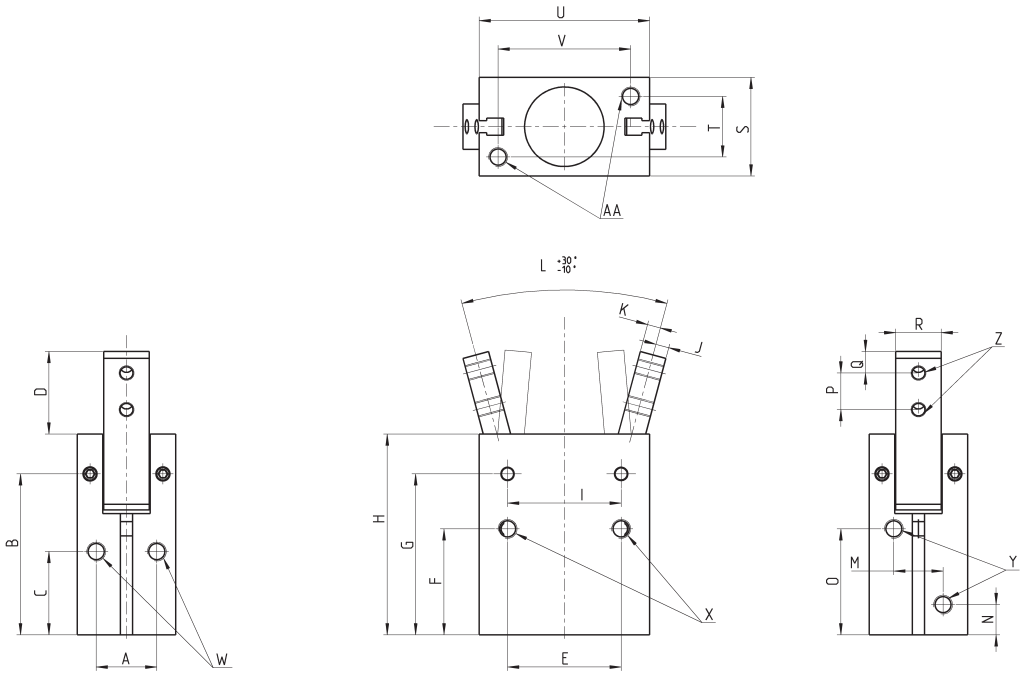

Y = port connection
Z = finger mounting-holes
X.W.AA = mounting holes

DIMENSIONS

Mod.	A	B	C	D	E	F	G	H	I	J	K	L	M	N	O	P	Q	R	S	T	U	V
CGA-10	10	30.5	15.5	15.7	18	20	30.5	36.5	14	2.5	1.5	0°	10	7.5	19	6	3	7	16	10	23	17
CGA-16	14	38	21	17.5	24	25.5	38	45.5	24	3	3	0°	12	7.5	25.5	8	3	9	22	14	34	26
CGA-20	16	42,5	22	22	30	28	42.5	53	30	3.5	3.5	0°	13	8	28	10	4	12	26	16	45	35
CGA-25	20	48.5	24.5	26	36	31.5	48.5	61	36	4.5	4.5	0°	18	9	31	12	5	14	32	20	52	40
CGA-32	26	54	30	30	44	37.5	54	68	42	5	5	0°	24	10	33.5	14	6	18	40	26	60	46

DIMENSIONS

Mod.	X thread	X depth	Y thread	Y depth	W thread	W depth	Z thread	Z depth	AA thread	AA depth
CGA-10	M3	7	M3	-	M3	-	M3	-	M3	5
CGA-16	M4	11	M5	-	M4	-	M3	-	M4	7
CGA-20	M5	13	M5	-	M5	-	M4	-	M5	8
CGA-25	M6	15	M5	-	M6	-	M5	-	M6	10
CGA-32	M6	20	M5	-	M6	-	M6	-	M6	10

Mounting brackets Mod. L-CGP

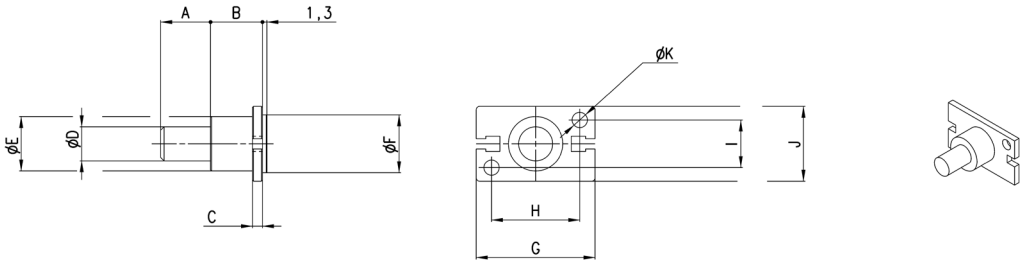

Mod.	A	B	C	D	E	F	G	H	I	J	K
L-CGP-16	15	15	3	10	16	17	35	26	14	22	4,5
L-CGP-20	15	15	3	10	18	21	46	35	16	26	5,5
L-CGP-25	25	17	5	14	26	26	53	40	20	32	6,6
L-CGP-32	25	20	6	16	30	34	61	46	26	40	6,6

Mounting brackets Mod. C-CGP

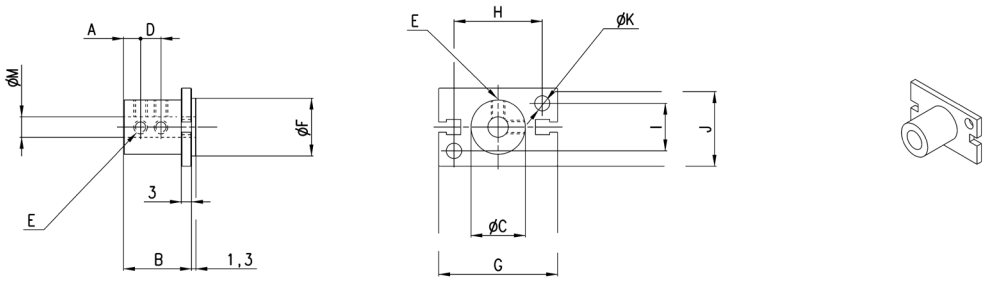

Mod.	A	B	C	D	E	F	G	H	I	J	K	M
C-CGP-16	5	20,5	16	7	M4	17	35	26	14	23	4,5	6
C-CGP-20	7	25,5	20	9	M4	21	46	35	16	27	5,5	8
C-CGP-25	8	30,5	25	10	M4	26	53	40	20	33	6,6	10
C-CGP-32	10	40,5	32	15	M4	34	61	46	26	41	6,6	12

Series CGSN
180° angular grippers

Magnetic
Sizes: ø 16, 20, 25, 32 mm

- High flexibility during installation
- Steel gripping fingers resistant to corrosion
- Wide working area

A permanent magnet within the gripper is able to send, through proximity switches (Series CSC and CSD) inserted in the grooves on the body, electrical signals to indicate the position of the gripping fingers.
The link mechanism used ensures a high gripping force.

Series CGSN grippers guarantee precision and flexibility during installation. Each gripper has calibrated holes on the base and side for very precise positioning.
Installation is made even easier due to the availability of male and female mounting brackets (Mod. C-CGP female or L-CGP male).

GENERAL DATA

Operation	double effect
Working pressure	2 bar ÷ 8 bar
Working temperature	5°C ÷ 60°C
Max operating frequency	100 cylcles/min
Lubrication	lubrication is required on sliding section only
Lever open/close angles	-1° / + 180° (tolerance ±3°)
Repeatability	± 0.2 mm
Air ports	M5x0.8
Fluid	Filtered air without lubrication. If lubricated air is used, it is recommended to use oil ISO VG32. Once applied, lubrication should never be interrupted.
Bore sizes (mm)	16 20 25 32
Weight(g)	140 255 430 740
Theoretical gripping moment [M] (N·mm)	1230xP 2350xP 4540xP 9680xP [P = pressure (MPa)]
Max length of gripping point [L] (mm)	80 100 120 140
Effective gripping force [F] (N)	F = M/L x 0.9 (value with the fingers in parallel position)
Example with P = 0.5MPa and L max	F = 7N F = 10N F = 17N F = 30N

CODING EXAMPLE

CGSN	-	20

CGSN	SERIES	PNEUMATIC SYMBOL PNZ1 See the following pages
20	SIZES 16 = ø 16 mm 20 = ø 20 mm 25 = ø 25 mm 32 = ø 32 mm	

Series CGSN Gripper - construction

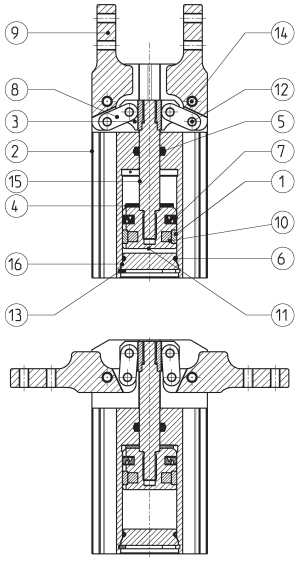

PARTS	MATERIALS
1 = Piston guide ring	Polyacetalic
2 = Body	Aluminium
3 = T-shackle	Stainless steel
4 = Bumper seal	TPU
5 = Rod seal	HNBR
6 = Head seal	NBR
7 = Piston seal	HNBR
8 = Connecting rod lever	Stainless steel
9 = Finger lever	Stainless steel
10 = Magnet	Plastoferrite
11 = Piston	Aluminium
12 = Needle	Steel
13 = Seeger	Steel
14 = Pin	Steel
15 = Rod	Steel
16 = Head	Polyacetal POM

Criteria to choose the most suitable size: 1) GRIPPING FORCE ANALYSIS

The choice of the most suitable gripper has to be carried out according to the weight of the object that has to be moved. It is suggested that the selected model develops a gripping force at least 20 times higher than the weight of the object. In case of great acceleration or impact during the moving of the object, it is necessary to supply a wider margin.

EXAMPLE OF CALCULATION (see the diagram on the right)
Weight of the object to be moved (Kg) = 0.06
Coefficient of safety = 20
Gripping moment L (mm) = 30
Working pressure (MPa) = 0.5
F = gripping force
Fmin [min. required gripping force] = 0,06kg x 20 x 9.8m/s² = 12N (minimum).

Through the diagrams "Effective Gripping force" we deduce from the above mentioned conditions that the gripping force with the mod. CGSN-16 is 16N, that is 26 times the weight of the object. The condition requiring that grip force is at least 20 times higher than the set gripping force is thus satisfied.

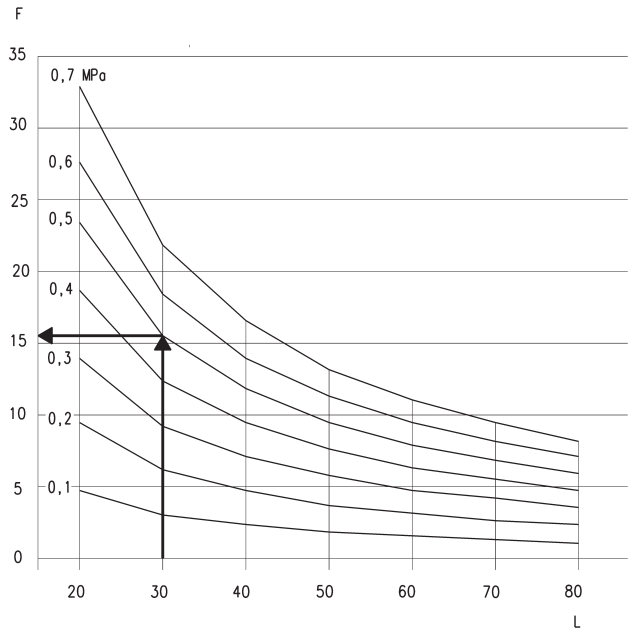

DRAWING LEGEND:
L = Gripping moment (mm)
F = Finger push (N)

EFFECTIVE GRIPPING FORCE (F)
The shown gripping force corresponds to the gripping force of a finger when all fingers (or accessories) are in contact with the load.

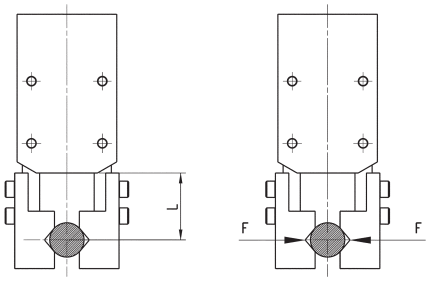

Criteria to choose the most suitable size: 2) GRIPPING MOMENT ANALYSIS

LEGEND:
H = Gripping arm (mm)
P = Pressure (MPa)

The load has to be maintained within the distance field from the gripper barycentre (H) for a certain set pressure.
If the load is outside the recommended field for a certain pressure, the product durability can be compromised.

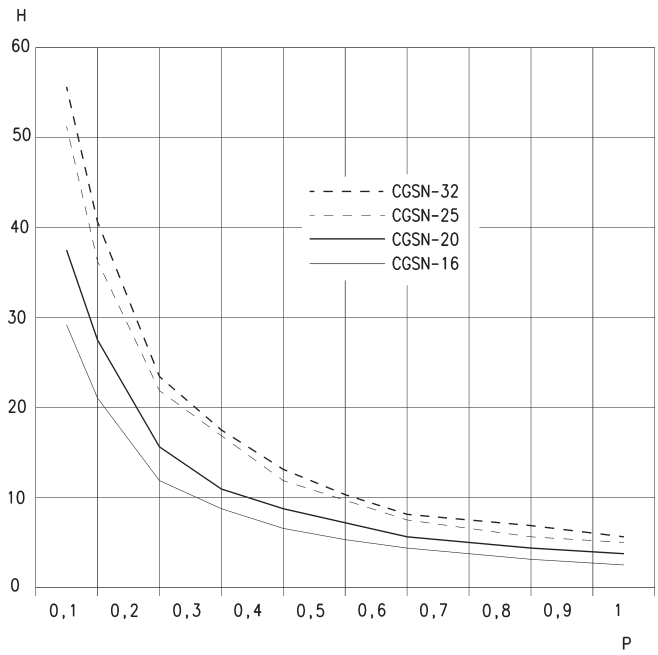

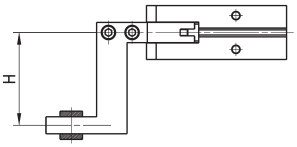

Diagrams to choose the most suitable gripper size

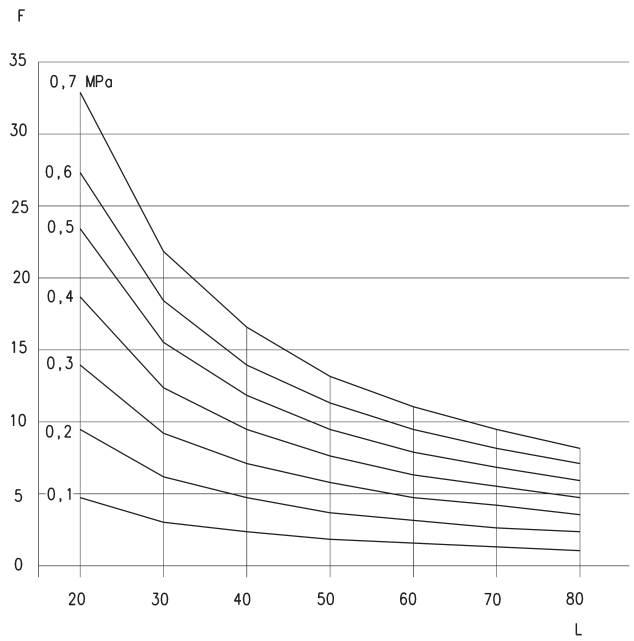

CGSN-16

F = Gripping force (N)
L = Gripping moment (mm)

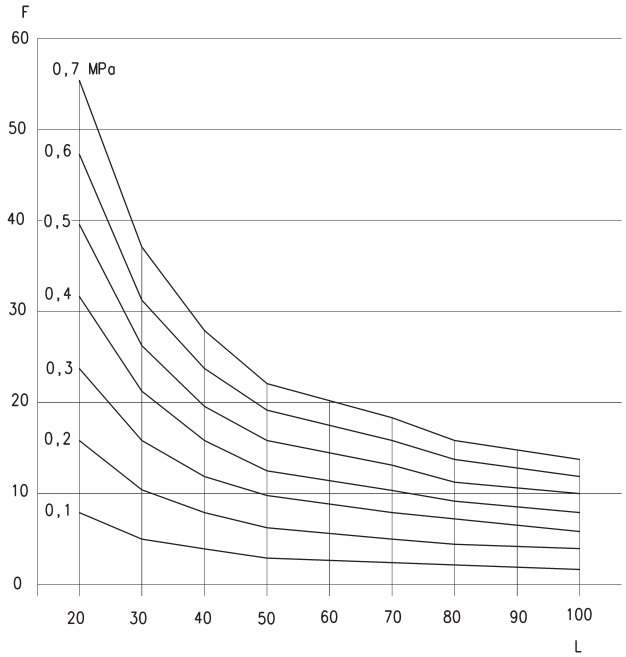

CGSN-20

F = Gripping force (N)
L = Gripping moment (mm)

Diagrams to choose the most suitable gripper size

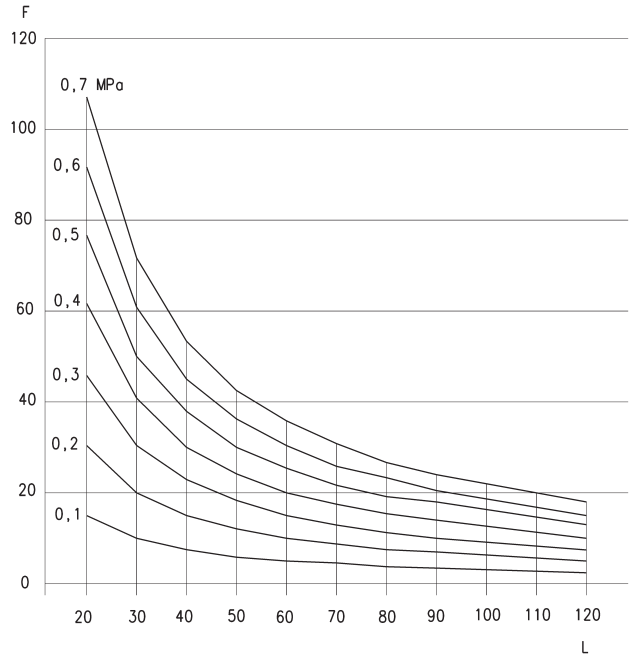

CGSN-25

F = Gripping force (N)
L = Gripping moment (mm)

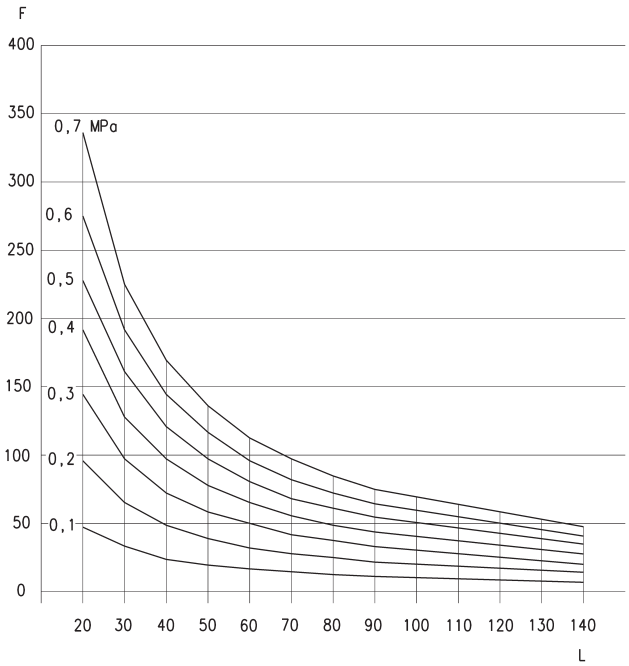

CGSN-32

F = Gripping force (N)
L = Gripping moment (mm)

CGSN gripper, bore 16 mm - dimensions

A = groove for Series CSD sensors

* = depth of the mounting threads
** = thread for the accessory mounting
*** = opening/closing for air connections

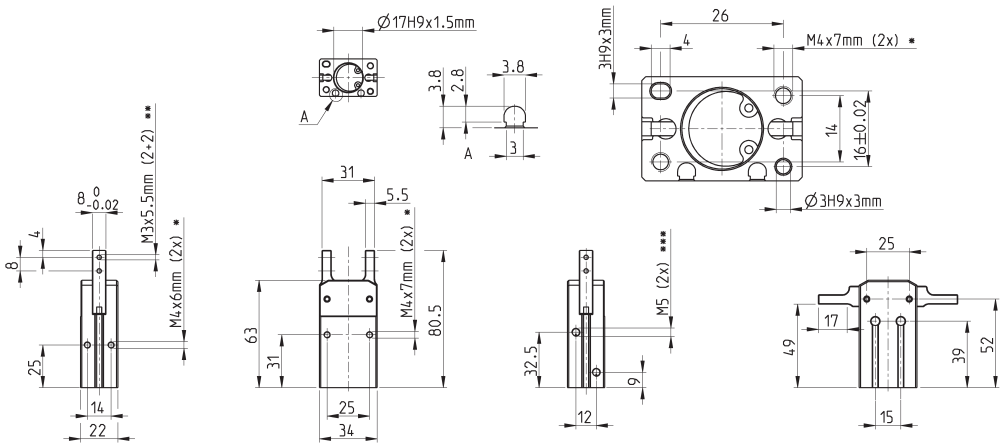

Mod.
CGSN-16

CGSN gripper, bore 20 mm - dimensions

A = groove for Series CSD sensors

* = depth of the mounting threads
** = thread for the accessory mounting
*** = opening/closing for air connections

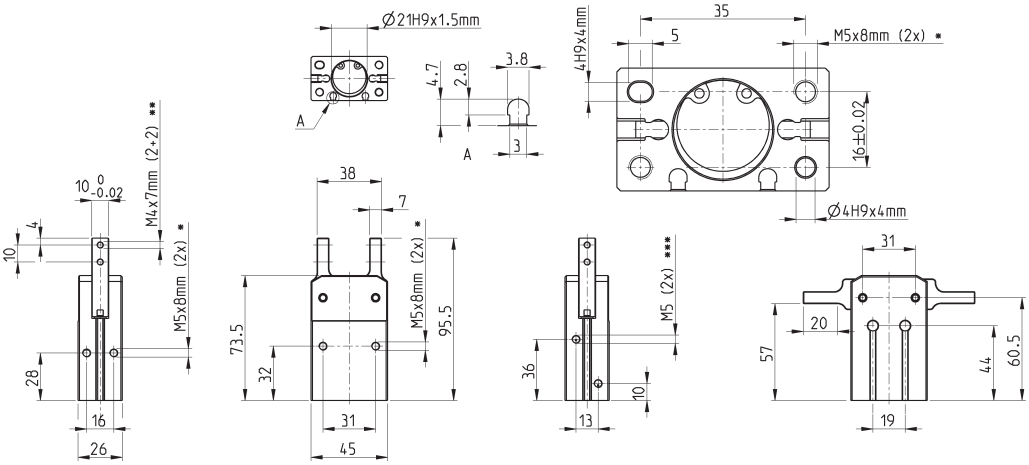

Mod.
CGSN-20

CGSN gripper, bore 25 mm - dimensions

A = groove for Series CSD sensors

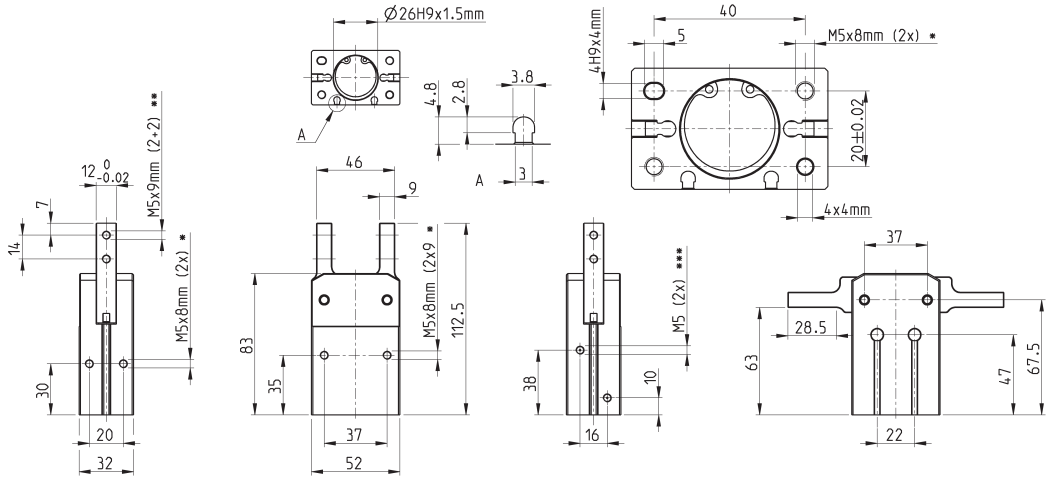

* = depth of the mounting threads
** = thread for the accessory mounting
*** = opening/closing for air connections

Mod.
CGSN-25

CGSN gripper, bore 32 mm - dimensions

A = groove for Series CSD sensors

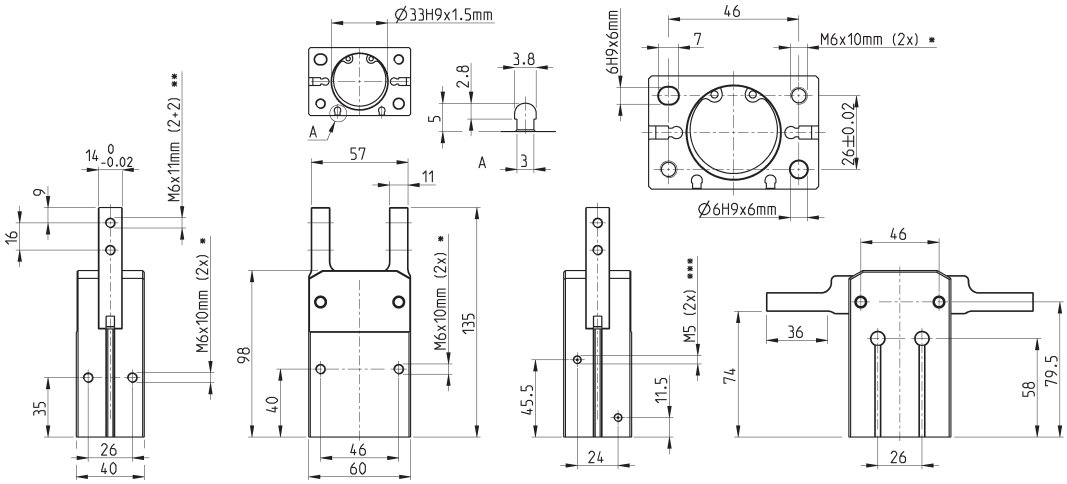

* = depth of the mounting threads
** = thread for the accessory mounting
*** = opening/closing for air connections

Mod.
CGSN-32

Mounting brackets Mod. L-CGP

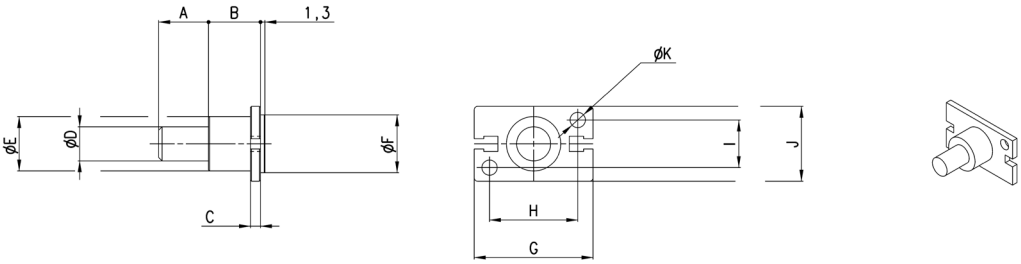

Mod.	A	B	C	D	E	F	G	H	I	J	K
L-CGP-16	15	15	3	10	16	17	35	26	14	22	4,5
L-CGP-20	15	15	3	10	18	21	46	35	16	26	5,5
L-CGP-25	25	17	5	14	26	26	53	40	20	32	6,6
L-CGP-32	25	20	6	16	30	34	61	46	26	40	6,6

Mounting brackets Mod. C-CGP

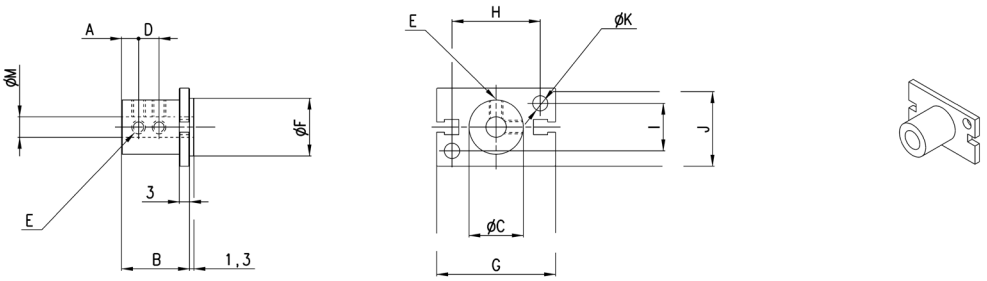

Mod.	A	B	C	D	E	F	G	H	I	J	K	M
C-CGP-16	5	20,5	16	7	M4	17	35	26	14	23	4,5	6
C-CGP-20	7	25,5	20	9	M4	21	46	35	16	27	5,5	8
C-CGP-25	8	30,5	25	10	M4	26	53	40	20	33	6,6	10
C-CGP-32	10	40,5	32	15	M4	34	61	46	26	41	6,6	12

Series CGP parallel grippers

Magnetic
Sizes: ø 10, 16, 20, 25, 32 mm

- High durability
- Compact design
- High gripping force

Series CGP parallel grippers are available in 5 different sizes.
The closing action of the gripper is generated from the cylinder's thrust side, resulting in a higher gripping force. The gripper is equipped with ring bearings in the sliding section for higher durability. Gripper mod. CGP has mounting holes on three sides which provides flexibility in installation.

The proximity switches can be inserted in the U-shaped grooves on the body.
For an easier installation the gripper can also be equipped with an optional installation adaptor mod. C-CGP (female) or L-CGP (male).

GENERAL DATA

Model	CGP-10 CGP-16 CGP-20 CGP-25 CGP-32
Bore sizes (mm)	Ø 10 Ø 16 Ø 20 Ø 25 Ø 32
Type of operation	double-acting
Operating pressure	1.5 ÷ 7 bar
Operating temperature	0°C ÷ 80°C
Max. operating frequency	180 cycles/min
Lubrication	lever section - lubrication required on sliding section
Opening stroke (mm)	Ø 10 = 4 Ø 16 = 8 Ø 20 = 12 Ø 25 = 14 Ø 32 =16
Theoritical holding force - opening (N)	Ø 10 = 8 Ø 16 = 24 Ø 20 = 47 Ø 25 = 75 Ø 32 = 100 P = Related to a pressure of 5 bar with gripping point length 3 cm
Theoritical holding force - closing (N)	Ø 10 = 5 Ø 16 = 8 Ø 25 = 35 Ø 25 = 60 Ø 32 = 85 P = Related to a pressure of 5 bar with gripping point length 3 cm
Length of max gripping point L (cm)	3,0 4,0 6,0 7,0 8,5 L = Related to a pressure of 5 bar
Weight(g)	Ø 10 = 50 Ø 16 = 140 Ø 20 = 250 Ø 25 = 410 Ø 32 = 680
Port sizes	M5 (CGP-10 M3)
Fluid	filtered air, without lubrication. In case lubricated air is used, it is recommended to use oil ISO VG32. Once applied, the lubrication should never be interrupted.

CODING EXAMPLE

CGP	-	20

CGP	SERIES	PNEUMATIC SYMBOL PNZ1
20	SIZES 10 = ø 10 mm 16 = ø 16 mm 20 = ø 20 mm 25 = ø 25 mm 32 = ø 32 mm	

PNEUMATIC SYMBOLS

The pneumatic symbols which have been indicated in the CODING EXAMPLE are shown below.

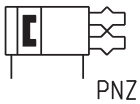

PNZ1

GRIPPING FORCE CHARACTERISTICS

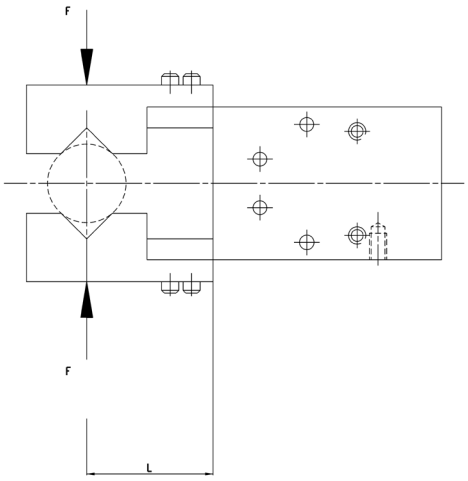

L = Gripping point length
F = Gripping Force

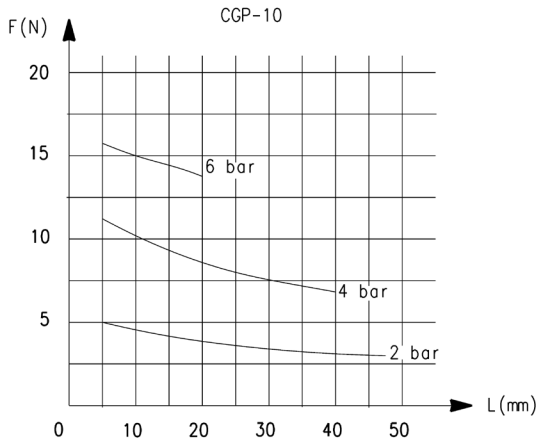

L = Gripping point length
F = Gripping Force

GRIPPING FORCE CHARACTERISTICS

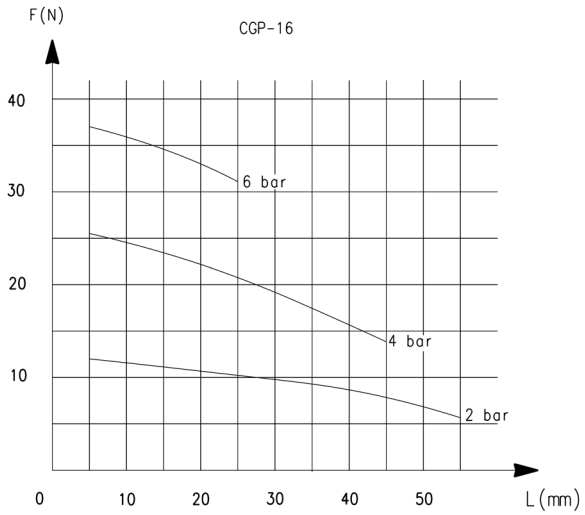

L = Gripping point length
F = Gripping Force

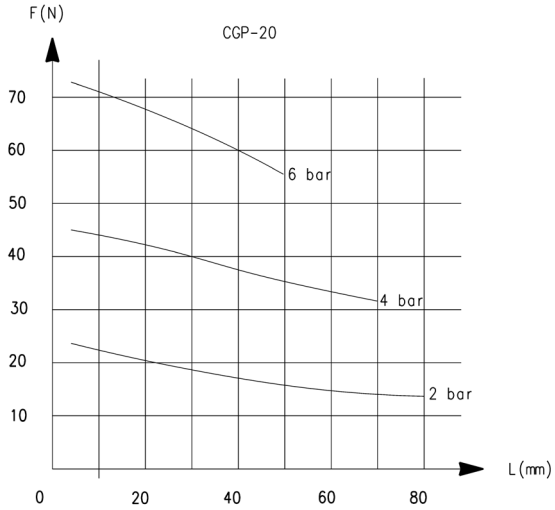

L = Gripping point length
F = Gripping Force

GRIPPING FORCE CHARACTERISTICS

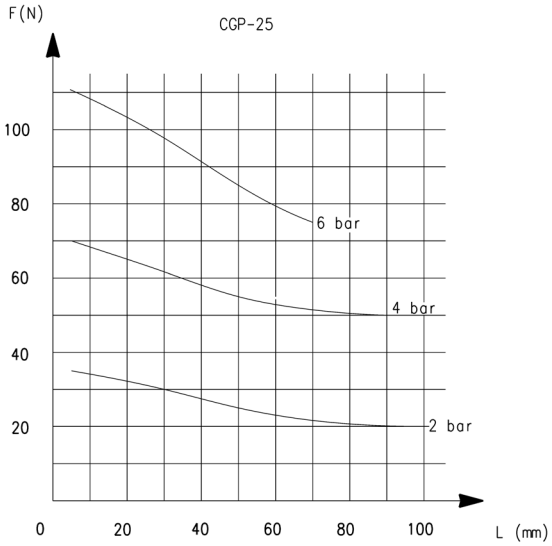

L = Gripping point length
F = Gripping Force

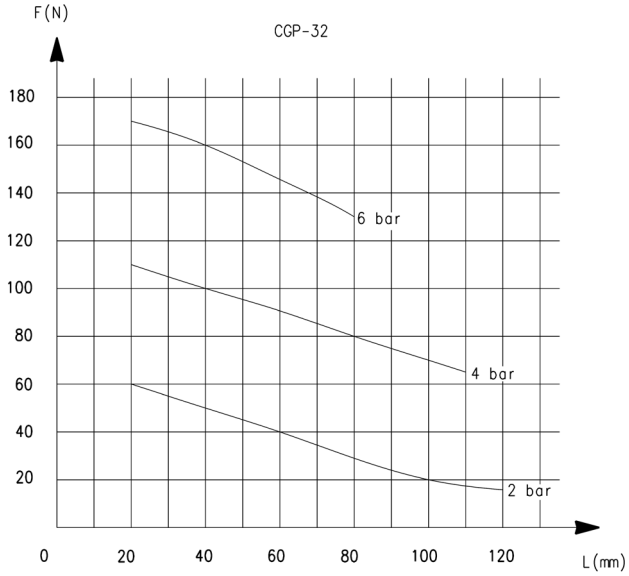

L = Gripping point length
F = Gripping Force

Parallel grippers Series CGP

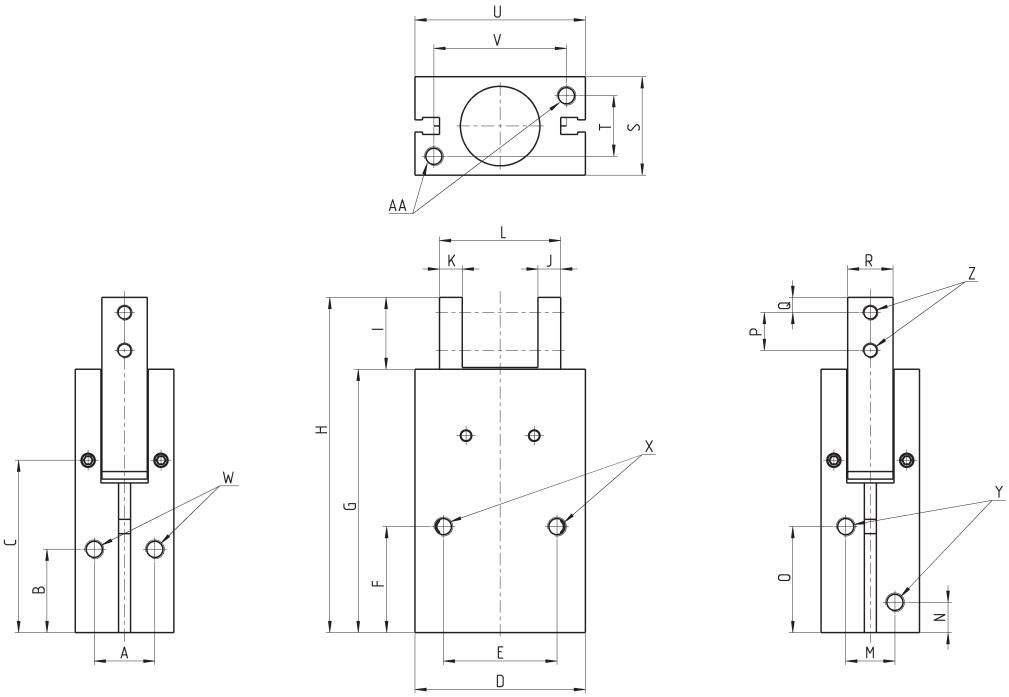

Y = port connection
Z = finger mounting-holes
X.W.AA = Mounting holes

DIMENSIONS

Mod.	A	B	C	D	E	F	G	H	I	J	K	L closed	L open	M	N	O	P	Q	R	S	T	U	V
CGP-10	10	15,5	31,5	23	18	20	45	58	13	4	4	18	22	10	7,5	19	6	3	7	16	10	23	17
CGP-16	14	21	39,5	34	24	25,5	58,8	73,5	15	5	5	25	33	12	7,5	25,5	8	3	11	22	14	34	26
CGP-20	16	22	45,5	45	30	28	69,5	88,5	19	6	6	32	44	13	8	28	10	4	12	26	16	45	35
CGP-25	20	24,5	51	52	36	31,5	79,5	103,5	24	8	8	37	51	18	9	31	12	5	14	32	20	52	40
CGP-32	26	30	56	60	44	37,5	88	119	31	9	9	44	60	24	10	35	15	7	18	40	26	60	46

DIMENSIONS

Mod.	X thread	X depth	Y thread	Y depth	W thread	W depth	Z thread	Z depth	AA thread	AA depth
CGP-10	M3	7	M3	-	M3	5	M3	-	M3	5
CGP-16	M4	11	M5	-	M4	7	M3	-	M4	7
CGP-20	M5	13	M5	-	M4	8	M4	-	M5	8
CGP-25	M6	14	M5	-	M6	10	M5	-	M6	10
CGP-32	M6	20	M5	-	M6	10	M6	-	M6	10

Mounting brackets Mod. L-CGP

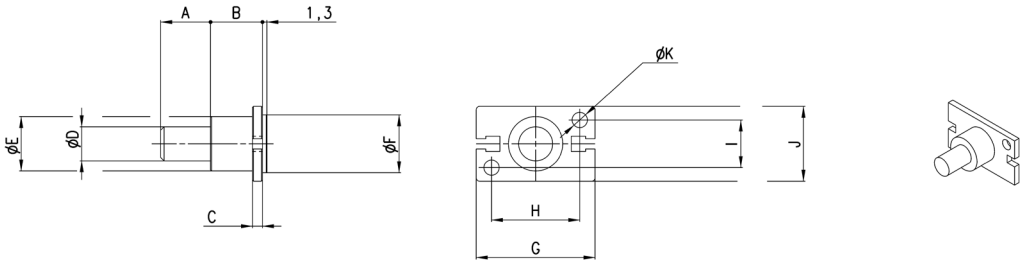

Mod.	A	B	C	D	E	F	G	H	I	J	K
L-CGP-16	15	15	3	10	16	17	35	26	14	22	4,5
L-CGP-20	15	15	3	10	18	21	46	35	16	26	5,5
L-CGP-25	25	17	5	14	26	26	53	40	20	32	6,6
L-CGP-32	25	20	6	16	30	34	61	46	26	40	6,6

Mounting brackets Mod. C-CGP

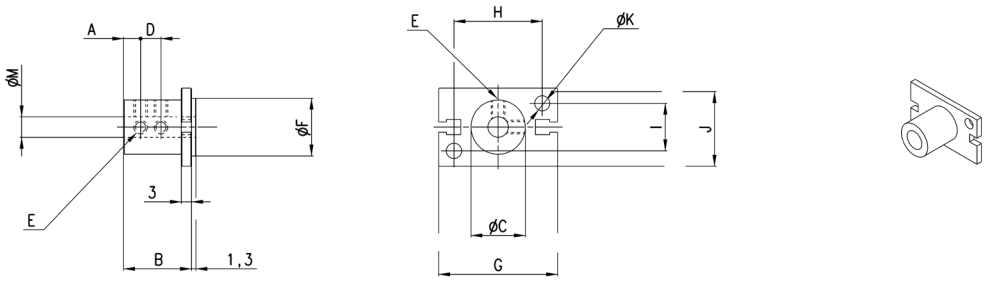

Mod.	A	B	C	D	E	F	G	H	I	J	K	M
C-CGP-16	5	20,5	16	7	M4	17	35	26	14	23	4,5	6
C-CGP-20	7	25,5	20	9	M4	21	46	35	16	27	5,5	8
C-CGP-25	8	30,5	25	10	M4	26	53	40	20	33	6,6	10
C-CGP-32	10	40,5	32	15	M4	34	61	46	26	41	6,6	12

Series CGPT self-centering parallel grippers with T-guide

Single and double acting, magnetic, self-centering
Bores: ø 16, 20, 25, 32, 40 mm

Thanks to the use of a high performing and precise force transmission system, the Series CGPT grippers are able to provide high gripping forces while guaranteeing a very high repeatability.

The wide range of sizes available allows you to find the best solution for any need of movement. The grippers are supplied with centering bushes (tolerance H8) which, once positioned on the body and/or on the jaws, are able to guarantee, during maintenance, a high interchangeability of the gripper and of the extensions.

- Robust, compact and light design
- High closing/opening forces
- Fixing from the top, from below and from the side
- Supply on the side or on the bottom (even without using tubes)
- Self-centering jaws
- High closing and opening repeatability
- High interchangeability (centering bushes)
- Position detection thanks to the use of magnetic proximity switches.
- In compliance with ROHS directive
- PTFE, Silicone and Copper free
- High reliability
- High resistance to external loads thanks to the T-guide
- Variants available for use in ATEX zones and for high temperatures

GENERAL DATA

Type of construction	Self-centering parallel gripper with T-guide
Operation	Single acting (NO, NC), double acting
Bores	Ø16, 20, 25, 32, 40 mm
Force transmission	Lever
Air connections	M3 (Ø16), M5 (Ø20, 25, 32), G1/8 (Ø40)
Working pressure	2 ÷ 8 bar (double acting), 4 ÷ 8 bar (single acting)
Working temperature	5°C ÷ 60°C (standard) - 5°C ÷ 150°C (high temperature version)
Store temperature	-10°C ÷ 80°C
Maximum use frequency	3 Hz (ø 16, 20, 25, 32), 2 Hz (ø 40)
Repeatability	0.02 mm
Interchangeability	0.1 mm
Medium	Filtered air in class 7.4.4 according to ISO 8573-1. In case lubricated air is used, we recommend ISOVG32 oil and to never interrupt lubrication.
Lubrication	After 10 million cycles, grease the sliding zones using Molykote DX grease.
Protection class	IP 40
Compatibility	ROHS Directive
Certifications	ATEX (II 2GD c IIC 120°C(T4)-20°C≤Ta≤80)
Materials	PTFE, Silicone and Copper free

N.B. Pressurize the pneumatic system gradually in order to avoid uncontrolled movements

CODING EXAMPLE

CGPT	-	16	-	NC	-	W	EX

CGPT	SERIES	
16	BORES: 10 = ø 10 mm 16 = ø 16 mm 20 = ø 20 mm 25 = ø 25 mm 32 = ø 32 mm 40 = ø 40 mm	
NC	FUNCTIONING: = double acting NO = single acting, normally open NC = single acting, normally closed	PNEUMATIC SYMBOLS PNZ1 PNZ3 PNZ2
W	VERSION: = standard W = high temperatures (150 °C) - not magnetic	
EX	Add EX to order the certified ATEX version	

PNEUMATIC SYMBOLS

The pneumatic symbols which have been indicated in the CODING EXAMPLE are shown below.

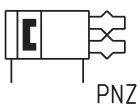
PNZ1


PNZ2


PNZ3

Maximum admissible loads and torques

Fz s, Mx s, My s, Mz s = maximum admissible loads and torques in static conditions
Fz d, Mx d, My d, Mz d = maximum admissible loads and torques in dynamic conditions

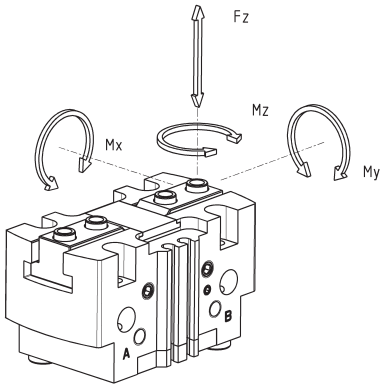

Mod.	Fz s (N)	Mx s (Nm)	My s (Nm)	Mz s (Nm)	Fz d (N)	Mx d (Nm)	My d (Nm)	Mz d (Nm)
CGPT-16	200	2.5	2.5	2	2	0.06	0.06	0.06
CGPT-20	350	5	7.5	4	4	0.12	0.12	0.12
CGPT-25	600	8	13	6.5	6	0.25	0.25	0.25
CGPT-32	900	18	30	15	9	0.5	0.5	0.5
CGPT-40	1500	40	60	30	15	1	1	1

Series CGPT grippers - construction

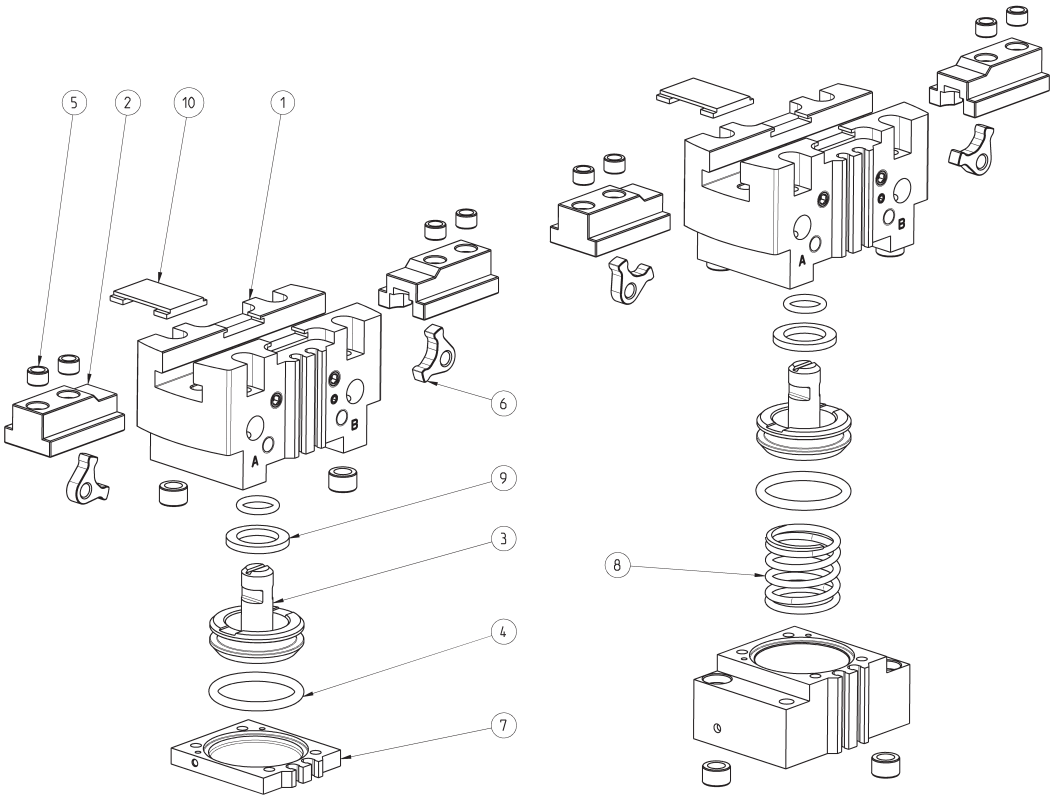

LIST OF COMPONENTS	
PARTS	MATERIALS
1 - Body	Aluminium
2 - Jaw	Stainless steel
3 - Piston	Stainless steel
4 - Seals	HNBR / FKM
5 - Centering bushes	Stainless steel
6 - Levers	Steel
7 - End cover	Aluminium
8 - Spring	Stainless steel
9 - Magnet	Neodymium
10 - Cover	Stainless steel

CGPT gripper, size 16 mm - dimensions

DRAWING LEGEND:
A = Opening of air connection
B = Closing of air connection
C = Closed gripper
D = Open gripper

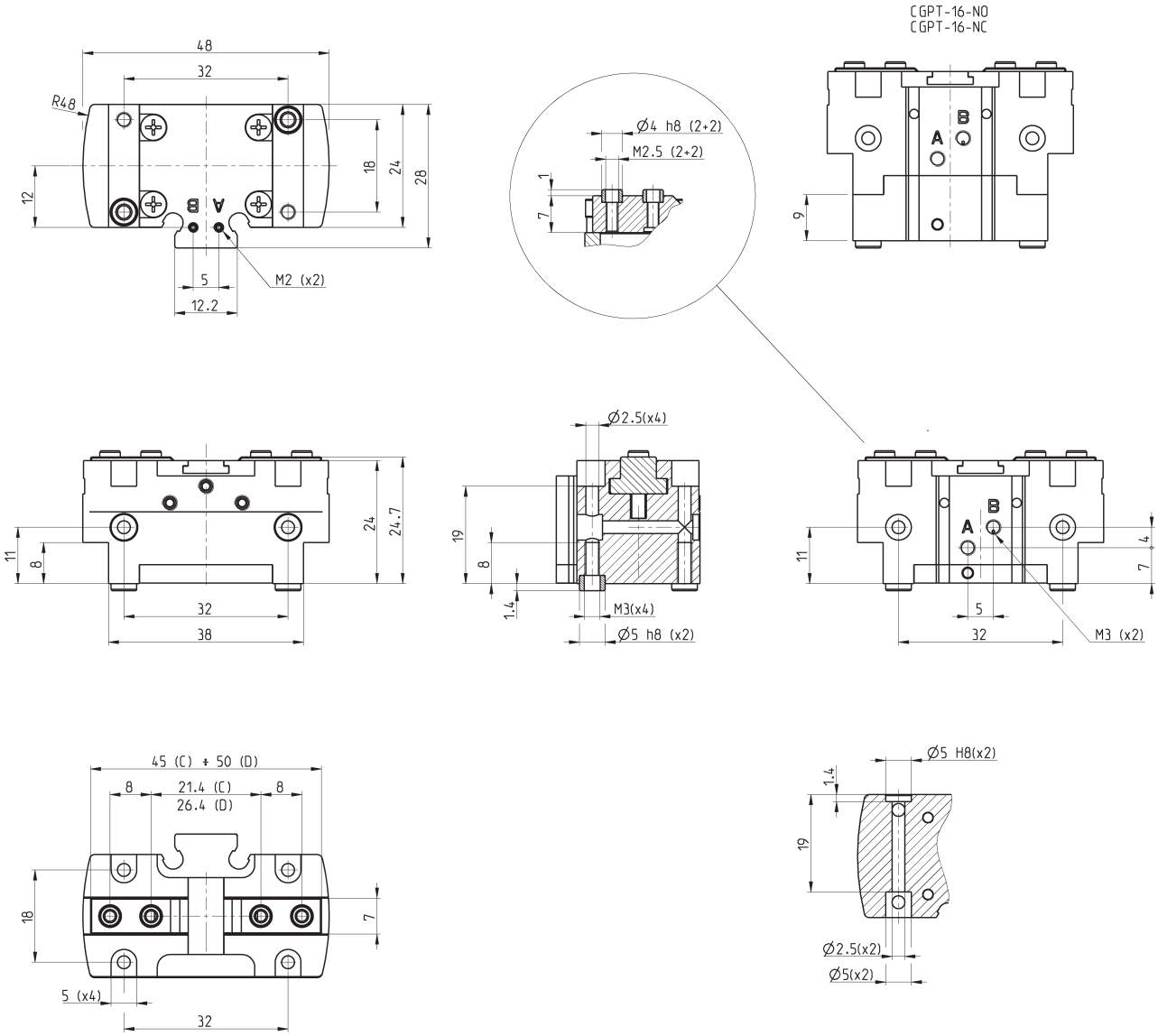

Mod.	Total closing gripping force at 6 bar (N)	Closing gripping force each jaw at 6 bar (N)	Total opening gripping force at 6 bar (N)	Opening gripping force each jaw at 6 bar (N)	Stroke per jaw (mm)	Working pressure (bar)	Working temperature (°C)	Repeatability (mm)	Max use frequency (Hz)	Weight (Kg)
CGPT-16	114	57	130	65	2.5	2 ÷ 8	5 ÷ 60	0.02	3	0.09
CGPT-16-NC	142	71	90	45	2.5	4 ÷ 8	5 ÷ 60	0.02	3	0.11
CGPT-16-NO	74	37	160	80	2.5	4 ÷ 8	5 ÷ 60	0.02	3	0.1

CGPT gripper, size 20 mm - dimensions

DRAWING LEGEND:
A = Opening of air connection
B = Closing of air connection
C = Closed gripper
D = Open gripper

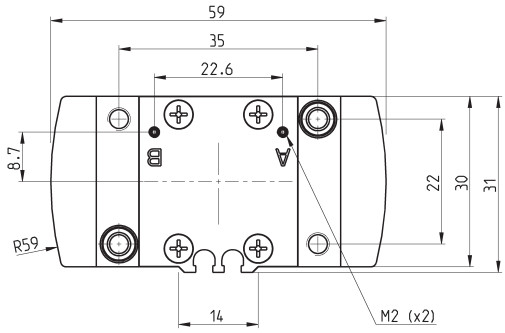

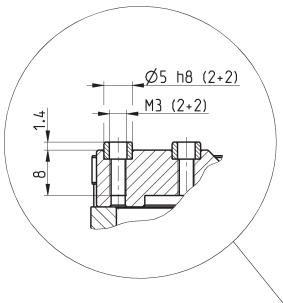

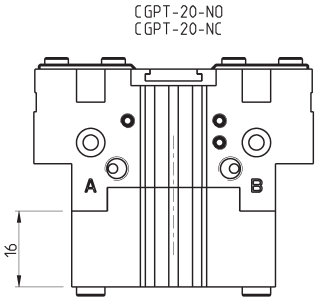

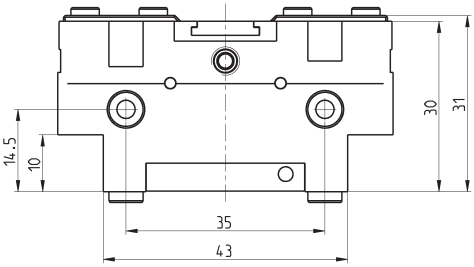

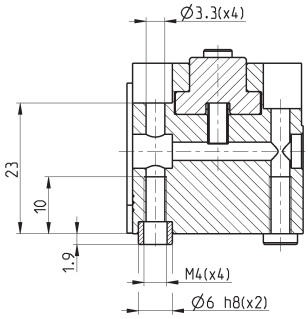

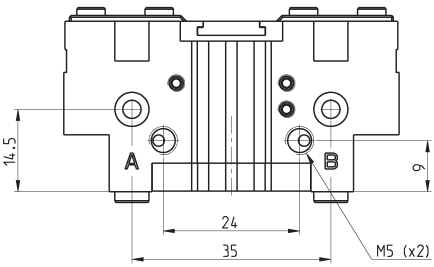

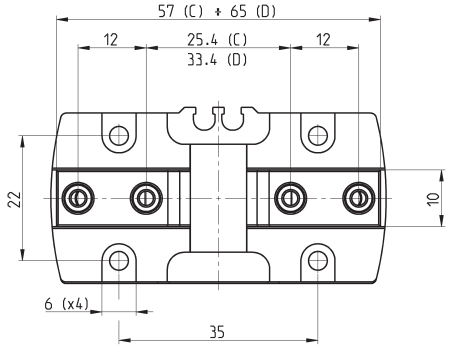

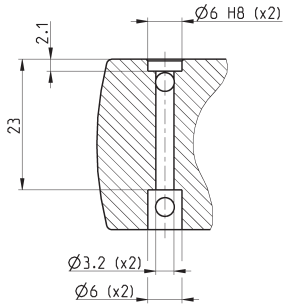

Mod.	Total closing gripping force at 6 bar (N)	Closing gripping force each jaw at 6 bar (N)	Total opening gripping force at 6 bar (N)	Opening gripping force each jaw at 6 bar (N)	Stroke per jaw (mm)	Working pressure (bar)	Working temperature (°C)	Repeatability (mm)	Max use frequency (Hz)	Weight (Kg)
CGPT-20	166	83	188	94	4	2 ÷ 8	5 ÷ 60	0.02	3	0.15
CGPT-20-NC	208	104	102	51	4	4 ÷ 8	5 ÷ 60	0.02	3	0.2
CGPT-20-NO	102	51	246	123	4	4 ÷ 8	5 ÷ 60	0.02	3	0.18

CGPT gripper, size 25 mm - dimensions

DRAWING LEGEND:
A = Opening of air connection
B = Closing of air connection
C = Closed gripper
D = Open gripper

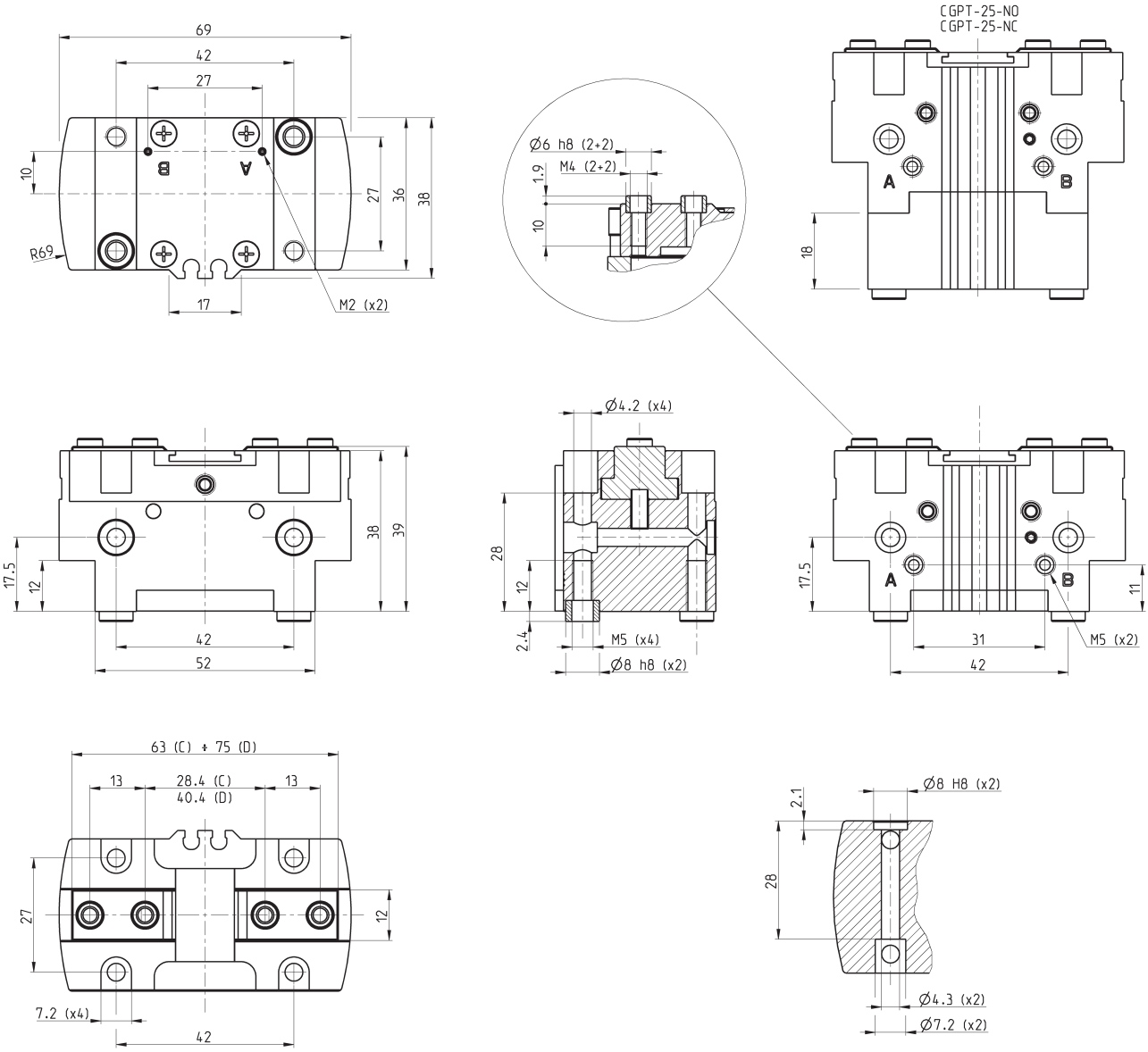

Mod.	Total closing gripping force at 6 bar (N)	Closing gripping force each jaw at 6 bar (N)	Total opening gripping force at 6 bar (N)	Opening gripping force each jaw at 6 bar (N)	Stroke per jaw (mm)	Working pressure (bar)	Working temperature (°C)	Repeatability (mm)	Max use frequency (Hz)	Weight (Kg)
CGPT-25	236	118	280	140	6	2 ÷ 8	5 ÷ 60	0.02	3	0.27
CGPT-25-NC	286	143	206	103	6	4 ÷ 8	5 ÷ 60	0.02	3	0.35
CGPT-25-NO	166	83	330	165	6	4 ÷ 8	5 ÷ 60	0.02	3	0.33

CGPT gripper, size 32 mm - dimensions

DRAWING LEGEND:
A = Opening of air connection
B = Closing of air connection
C = Closed gripper
D = Open gripper

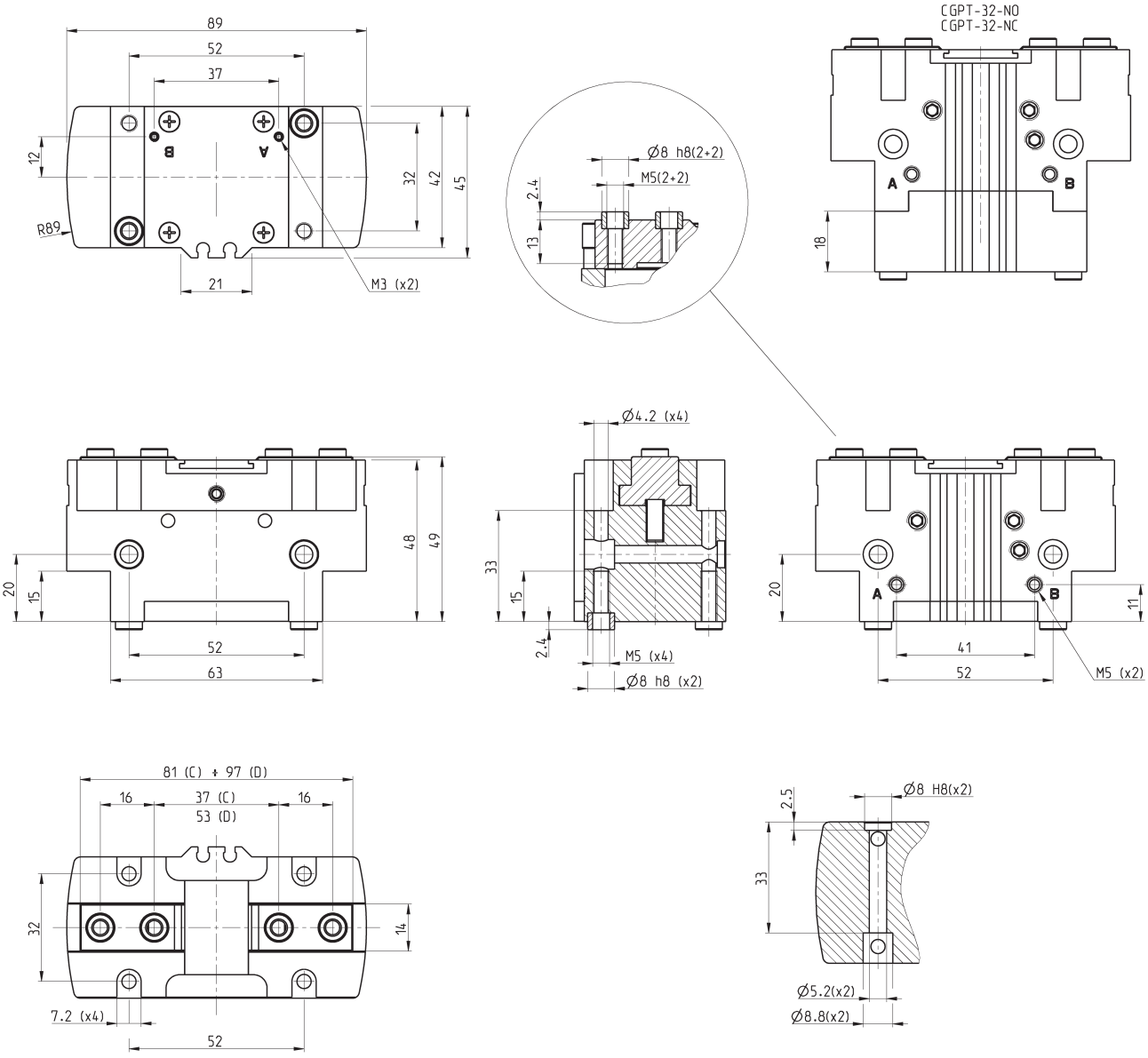

Mod.	Total closing gripping force at 6 bar (N)	Closing gripping force each jaw at 6 bar (N)	Total opening gripping force at 6 bar (N)	Opening gripping force each jaw at 6 bar (N)	Stroke per jaw (mm)	Working pressure (bar)	Working temperature (°C)	Repeatability (mm)	Max use frequency (Hz)	Weight (Kg)
CGPT-32	386	193	450	225	8	2 ÷ 8	5 ÷ 60	0.02	3	0.5
CGPT-32-NC	454	227	354	177	8	4 ÷ 8	5 ÷ 60	0.02	3	0.61
CGPT-32-NO	294	147	520	260	8	4 ÷ 8	5 ÷ 60	0.02	3	0.59

CGPT gripper, size 40 mm - dimensions

DRAWING LEGEND:
A = Opening of air connection
B = Closing of air connection
C = Closed gripper
D = Open gripper

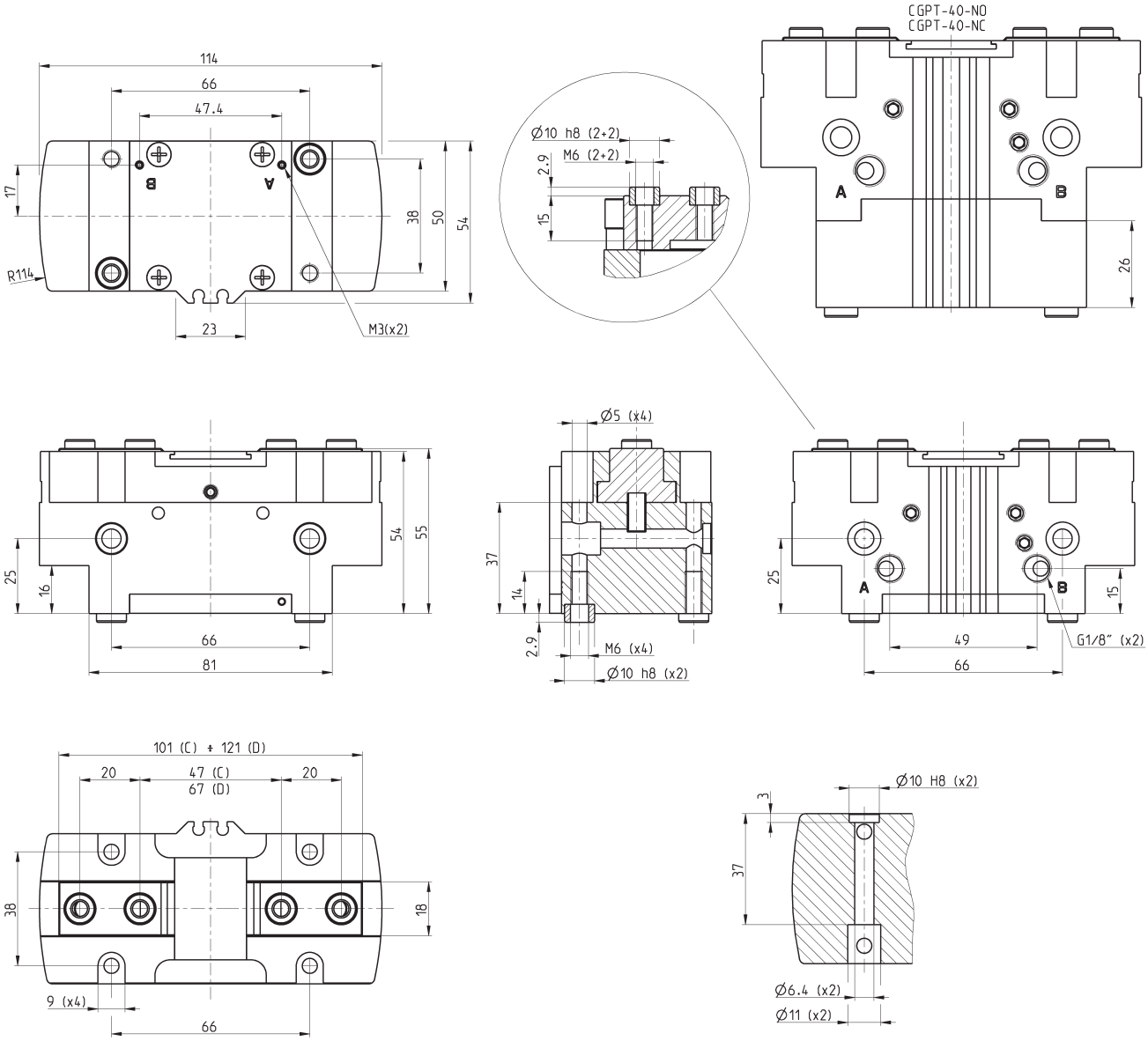

Mod.	Total closing gripping force at 6 bar (N)	Closing gripping force each jaw at 6 bar (N)	Total opening gripping force at 6 bar (N)	Opening gripping force each jaw at 6 bar (N)	Stroke per jaw (mm)	Working pressure (bar)	Working temperature (°C)	Repeatability (mm)	Max use frequency (Hz)	Weight (Kg)
CGPT-40	670	335	720	360	10	2 ÷ 8	5 ÷ 60	0.02	2	0.83
CGPT-40-NC	780	390	504	252	10	4 ÷ 8	5 ÷ 60	0.02	2	1.2
CGPT-40-NO	446	223	826	413	10	4 ÷ 8	5 ÷ 60	0.02	2	1.1

GRIPPING FORCE (Fc) PER SINGLE JAW

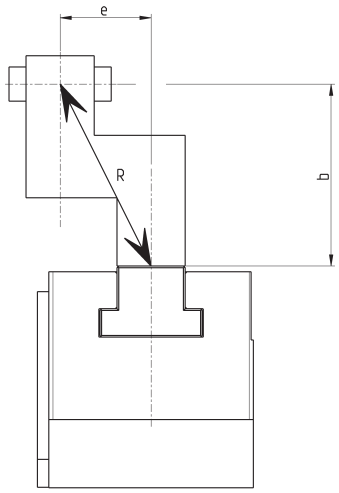

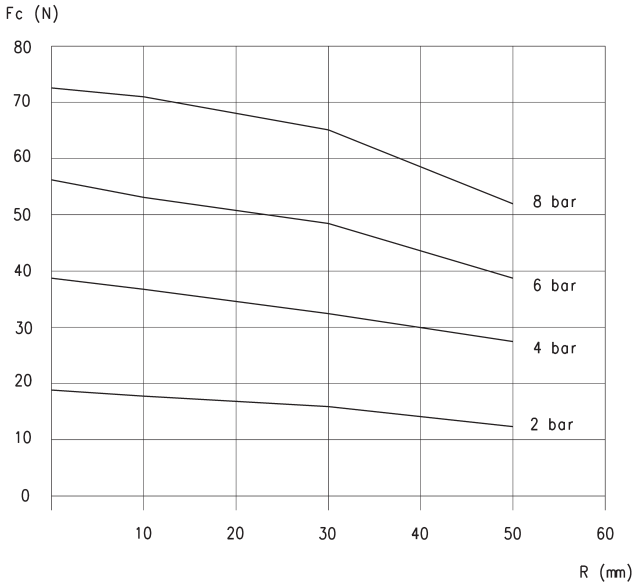

The total gripping force has to be calculated as follows:
Total Fc = Fc x 2

Gripping force in relation to the lever arm (R)
and the eccentricity (b, e)

$R = \sqrt{(b^2 + e^2)}$

CGPT-16

R = lever arm
Fc = closing gripping force

Fa (opening gripping force) = Fc + 10%

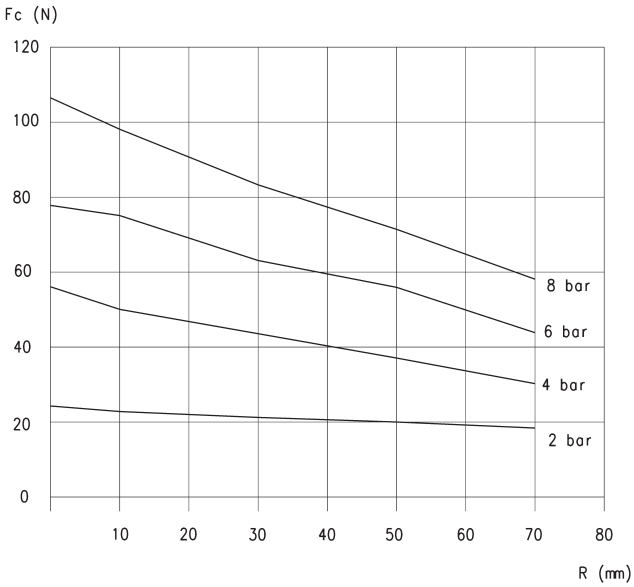

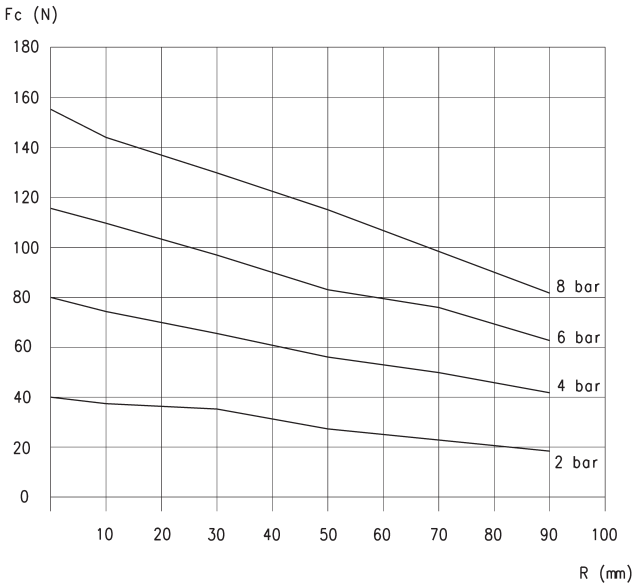

CGPT-20

R = lever arm
Fc = closing gripping force

Fa (opening gripping force) = Fc + 10%

CGPT-25

R = lever arm
Fc = closing gripping force

Fa (opening gripping force) = Fc + 10%

GRIPPING FORCE (Fc) PER SINGLE JAW

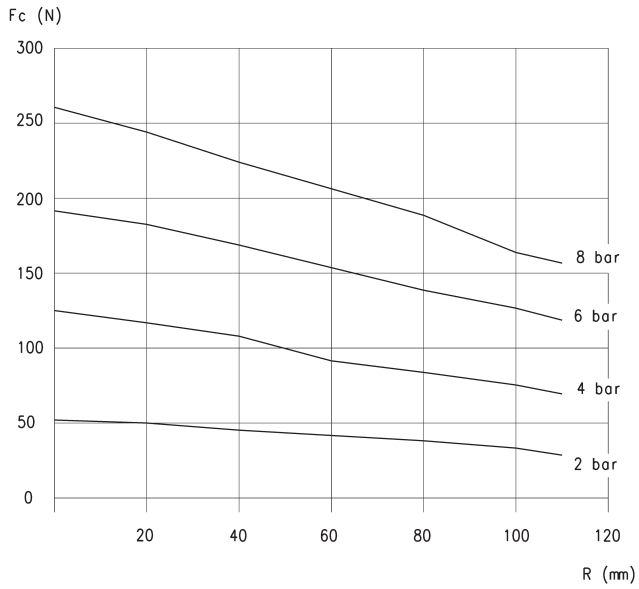

CGPT-32

R = lever arm
Fc = closing gripping force

Fa (opening gripping force) = Fc + 10%

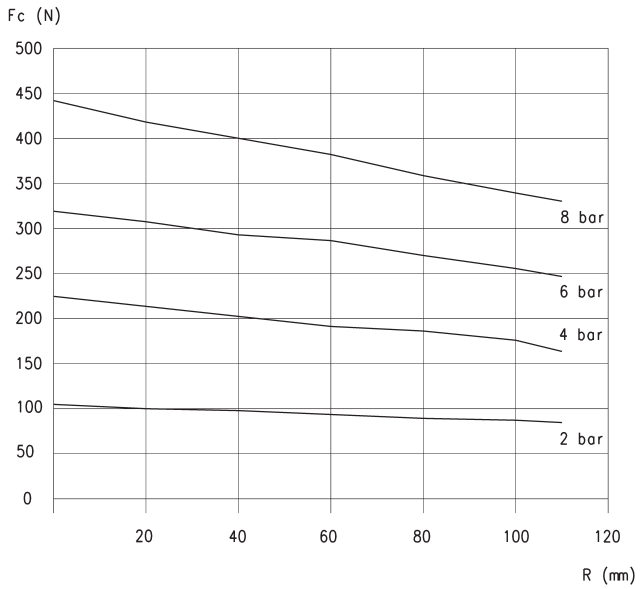

CGPT-40

R = lever arm
Fc = closing gripping force

Fa (opening gripping force) = Fc + 10%

Examples of mounting

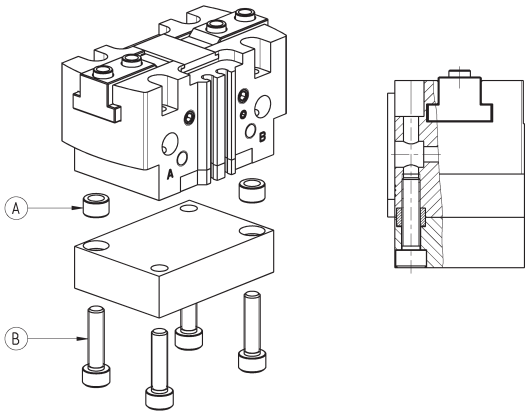

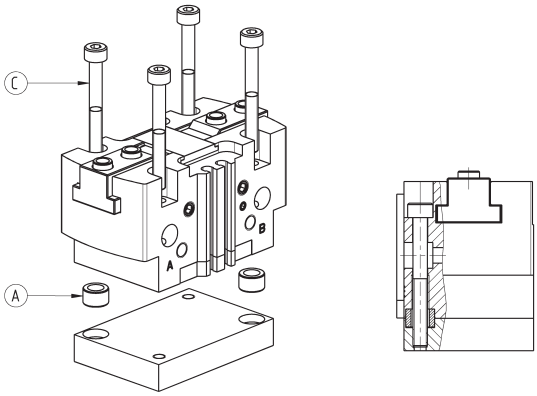

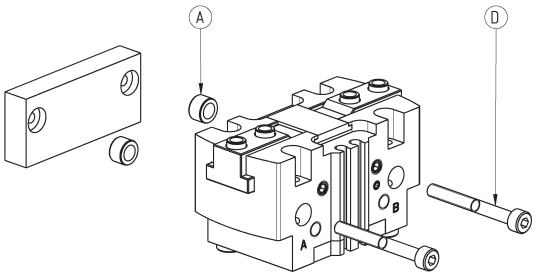

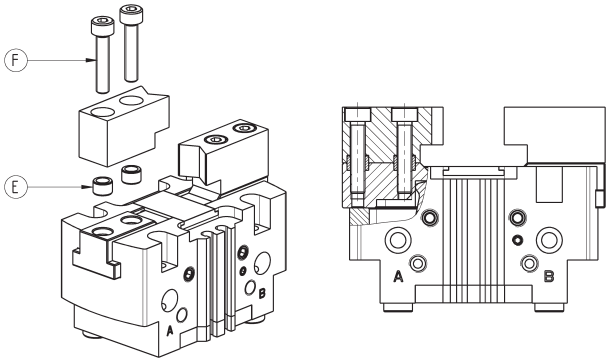

Mod.	A	B	C	D	E	F
CGPT-16	Ø5	M3	M2.5	M2.5	Ø4	M2.5
CGPT-20	Ø6	M4	M3	M3	Ø5	M3
CGPT-25	Ø8	M5	M4	M4	Ø6	M4
CGPT-32	Ø8	M5	M4	M5	Ø8	M5
CGPT-40	Ø10	M6	M5	M6	Ø10	M6

Air supply ports

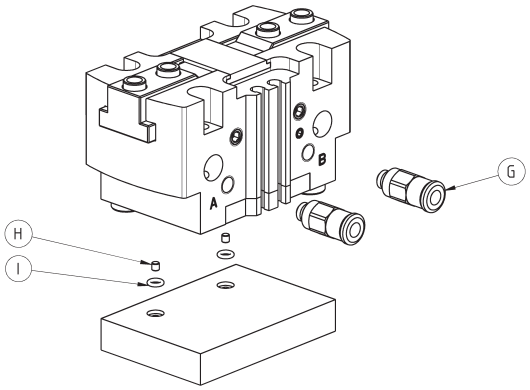

Mod.	G	H	I
CGPT-16	M3	M2	OR 1x2.5
CGPT-20	M5	M2	OR 1x2.5
CGPT-25	M5	M2	OR 1x2.5
CGPT-32	M5	M3	OR 1x3.5
CGPT-40	G1/8	M3	OR 1x3.5

Example of use of the pressurization/lubrication hole

Example of use of the lubrication (greasing) or pressurization hole of the zone with moving items

NOTE 1: grease the sliding zones using Molykote DX grease.
NOTE 2: supply a pressure of max. 3 bar in order to avoid the sudden ejection of grease.

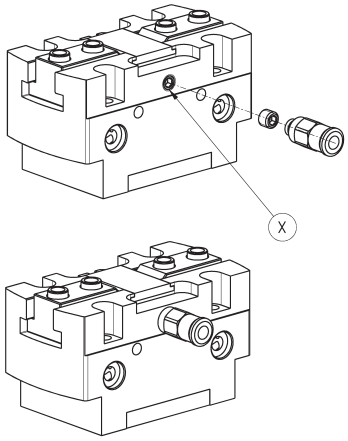

Mod.	X
CGPT-16	M3
CGPT-20	M5
CGPT-25	M5
CGPT-32	M5
CGPT-40	M5

Example of mounting: sensors

L = sensor mod. CSD-332 or mod. CSD-362

In order to position the sensor correctly, a channel must be created in the base.

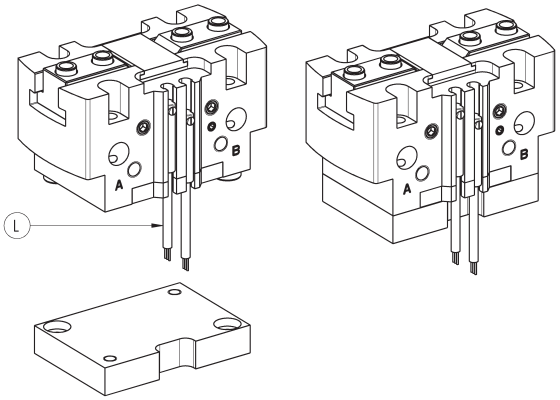

Mod.
CGPT-16
CGPT-20
CGPT-25
CGPT-32
CGPT-40

Series CSD magnetic proximity switches with 3-wire cable

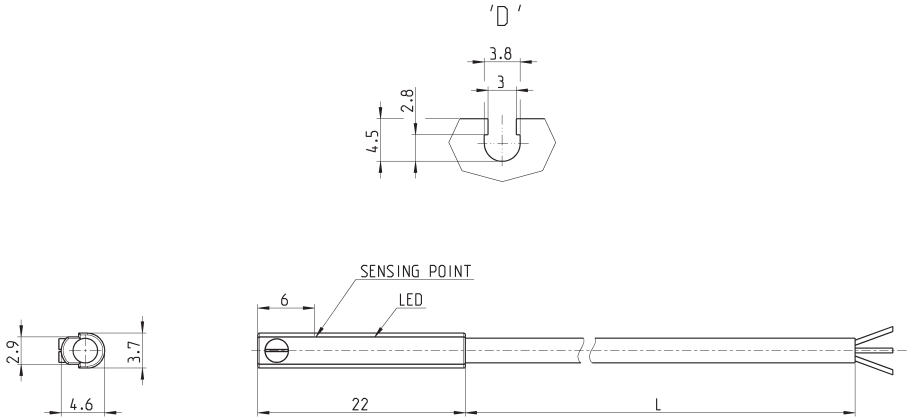

Mod.	Operation	Connections	Voltage	Output	Max. current	Max Load	Protection	L = length cable
CSD-332	Electronic	3 wires	10 ÷ 27 V DC	PNP	200 mA	6W	Against polarity reversing and overvoltage	2 m

Series CSD magnetic proximity switches with male connector M8

Length of cable 0.3 metres

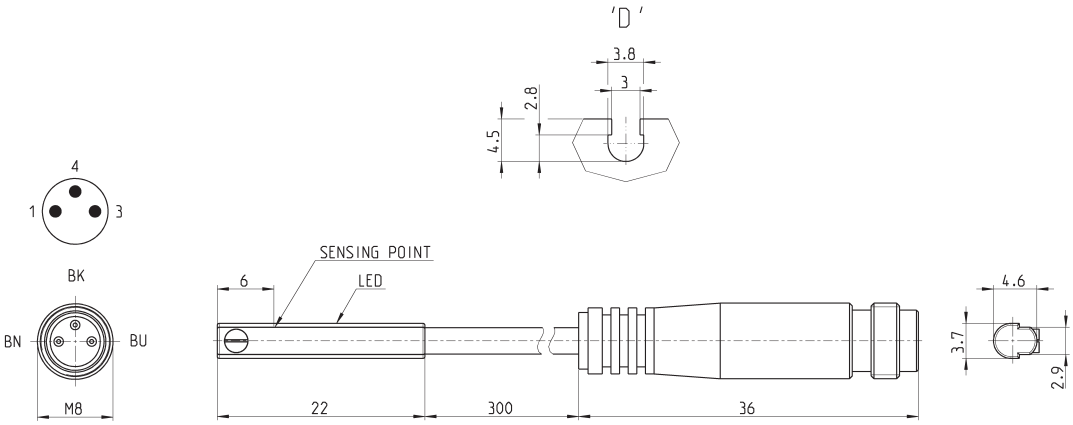

Mod.	Operation	Connection	Voltage	Output	Max. current	Max load	Protection
CSD-362	Electronic	3 wires with M8 connector	10 ÷ 27 V DC	PNP	200 mA	6W	Against polarity reversing and overvoltage

Series CGPS self-centering parallel grippers with double ball bearing guide

Single and double acting, magnetic, self-centering
Bores: Ø 10, 16, 20, 25, 32 mm

- Robust, compact and light design
- High closing/opening forces
- Fixing from below and from the side
- Supply on the side
- Self-centering jaws
- High closing and opening repeatability
- High interchangeability (bushes and centering plugs)
- Position detection (front and side) thanks to the use of Series CSD magnetic proximity switches
- In compliance with ROHS directive
- Finger types available: long with through-holes and flat with threaded holes
- High resistance to external loads thanks to the double ball bearing guide
- Variants available: for use in ATEX zones and for high temperatures

Thanks to the use of a high performing and precise force transmission system and to the double ball bearing guide, the Series CGPS grippers are able to provide high gripping forces while guaranteeing a very high repeatability and robustness (resistance to external static and dynamic loads).

The wide range of sizes available allows you to find the best solution for any need of movement. The grippers can be supplied with bushes and centering plugs (tolerance H8) which, once positioned on the body and/or on the jaws, are able to guarantee, during maintenance, a high interchangeability of the gripper and of the extensions.

GENERAL DATA

Type of construction	Self-centering parallel gripper with double ball bearing guide
Operation	Single acting (NO, NC), double acting
Bores	Ø 10, 16, 20, 25, 32 mm
Force transmission	Lever
Air connections	M3-M5 (M3 for size 10 only)
Working pressure	2 ÷ 8 bar (double acting), 4 ÷ 8 bar (single acting)
Working temperature	5°C ÷ 60°C (standard); 5°C ÷ 150°C (high temperature version)
Store temperature	-10°C ÷ 80°C
Maximum use frequency	3 Hz
Repeatability	0.02 mm
Interchangeability	0.1 mm
Medium	Filtered air in class 7.4.4 according to ISO 8573-1. In case lubricated air is used, we recommend ISOVG32 oil and to never interrupt lubrication.
Compatibility	ROHS Directive
Certifications	ATEX (II 2GD c IIC 120°C(T4)-20°C≤Ta≤80)
Materials	PTFE, Silicone and Copper free
Suitable magnetic proximity switches	Series CSD

NOTE: Pressurize the pneumatic system gradually in order to avoid uncontrolled movements

CODING EXAMPLE

CGPS	-	L	-	16	-	NO	-	W	EX

CGPS	SERIES	
L	DESIGN TYPE: L = Long finger F = Flat finger	
16	BORES: 10 = ø 10 mm 16 = ø 16 mm 20 = ø 20 mm 25 = ø 25 mm 32 = ø 32 mm	
NO	FUNCTIONING: = double acting NO = single acting, normally open NC = single acting, normally closed	PNEUMATIC SYMBOLS PNZ1 PNZ3 PNZ2
W	VERSION: = standard W = high temperatures (150°C) non magnetic	
EX	Add EX to order the certified ATEX version	

PNEUMATIC SYMBOLS

The pneumatic symbols which have been indicated in the CODING EXAMPLE are shown below.

Series CGPS grippers - construction

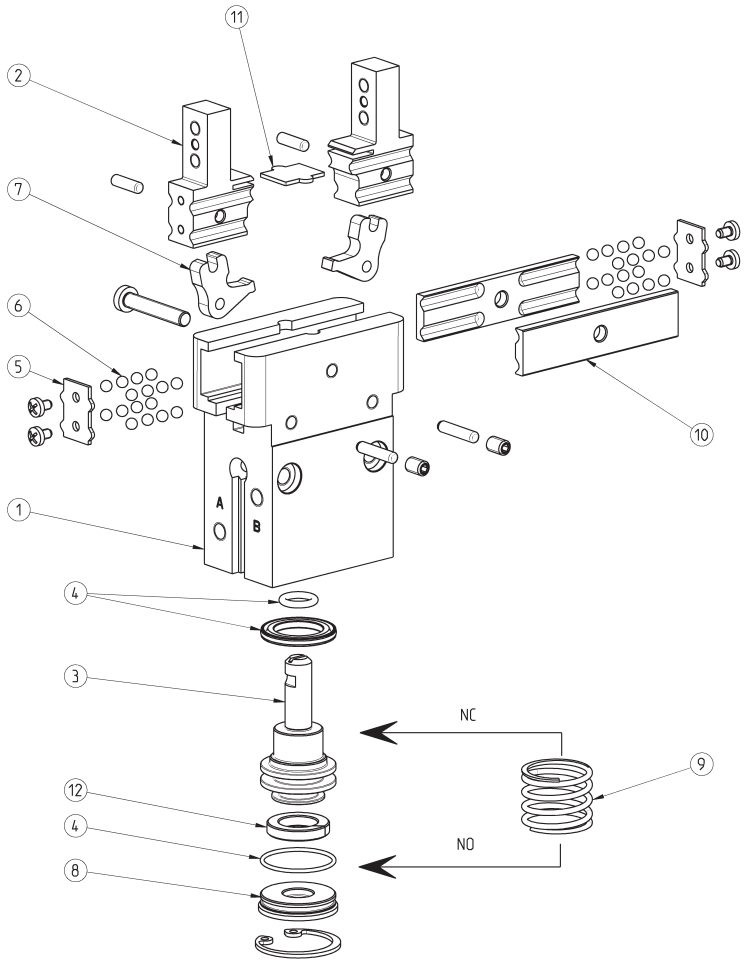

LIST OF COMPONENTS	
PARTS	MATERIALS
1 - Body	Aluminium
2 - Jaw	Stainless steel
3 - Piston	Stainless steel
4 - Seals	HNBR / FKM
5 - Ball bearings end cap	Stainless steel
6 - Slide ball bearings	Steel
7 - Levers	Steel
8 - Rear end-stroke	Pom (Acetal)
9 - Spring	Stainless steel
10 - Ball bearings guide	Stainless steel
11 - Jaws end cap	Steel
12 - Magnet	Plastoferrite

CGPS gripper, size 10 mm - dimensions

DRAWING LEGEND:
A = Opening of air connection
B = Closing of air connection
C = Closed gripper
D = Open gripper

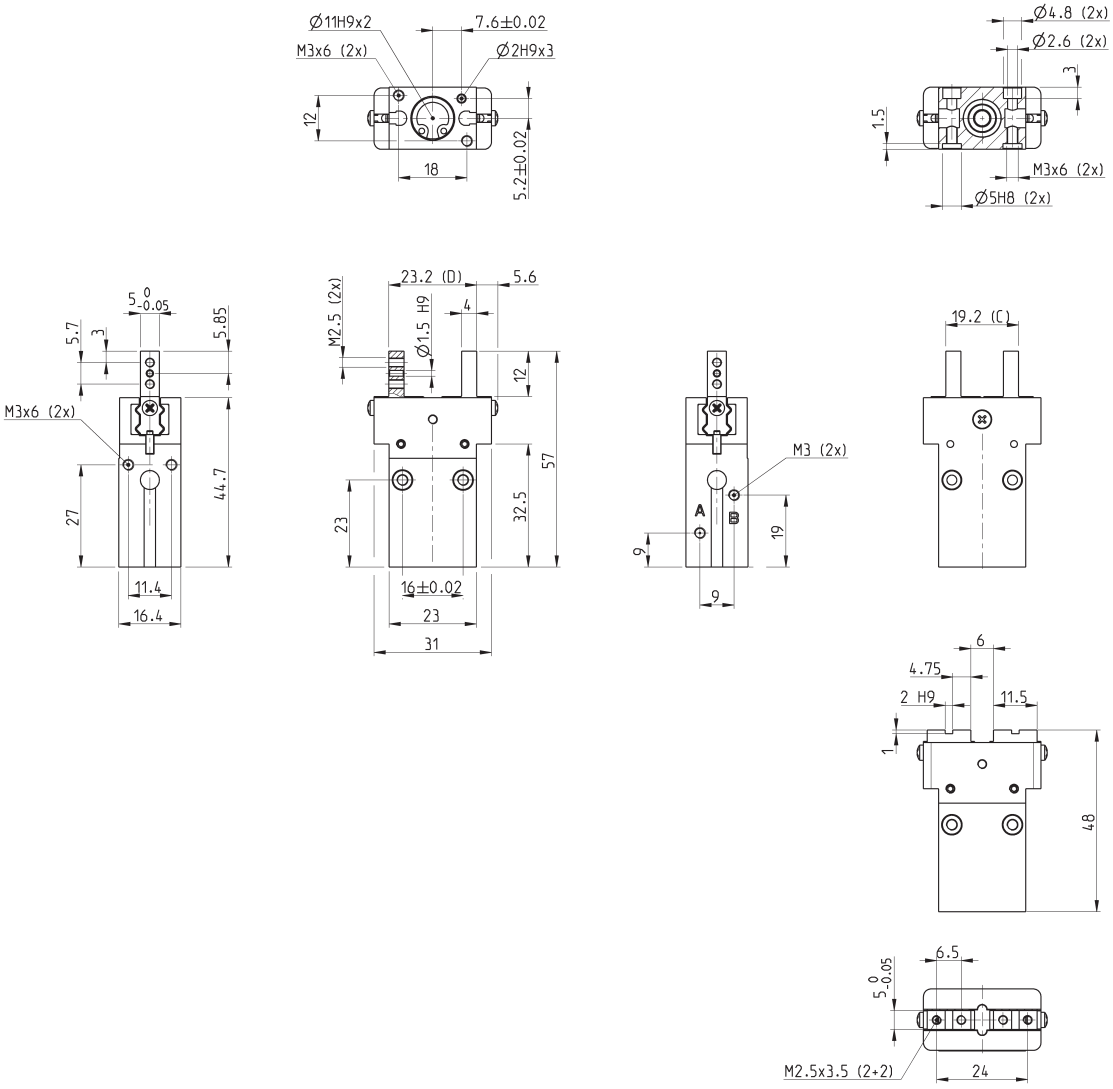

Mod.	Total closing gripping force at 6 bar (N)	Closing gripping force each jaw at 6 bar (N)	Total opening gripping force at 6 bar (N)	Opening gripping force each jaw at 6 bar (N)	Stroke per jaw (mm)	Working pressure (bar)	Working temperature (°C)	Repeatability (mm)	Max use frequency (Hz)	Weight (Kg)
CGPS-L-10	34	17	46	23	2	2 ÷ 8	5 ÷ 60	+/- 0.02	3	0.057
CGPS-F-10	34	17	46	23	2	2 ÷ 8	5 ÷ 60	+/- 0.02	3	0.058
CGPS-L-10-NC	42	21	32	16	2	4 ÷ 8	5 ÷ 60	+/- 0.02	3	0.058
CGPS-F-10-NC	42	21	32	16	2	4 ÷ 8	5 ÷ 60	+/- 0.02	3	0.059
CGPS-L-10-NO	20	10	55	27.5	2	4 ÷ 8	5 ÷ 60	+/- 0.02	3	0.058
CGPS-F-10-NO	20	10	55	27.5	2	4 ÷ 8	5 ÷ 60	+/- 0.02	3	0.059

CGPS gripper, size 16 mm - dimensions

DRAWING LEGEND:
A = Opening of air connection
B = Closing of air connection
C = Closed gripper
D = Open gripper

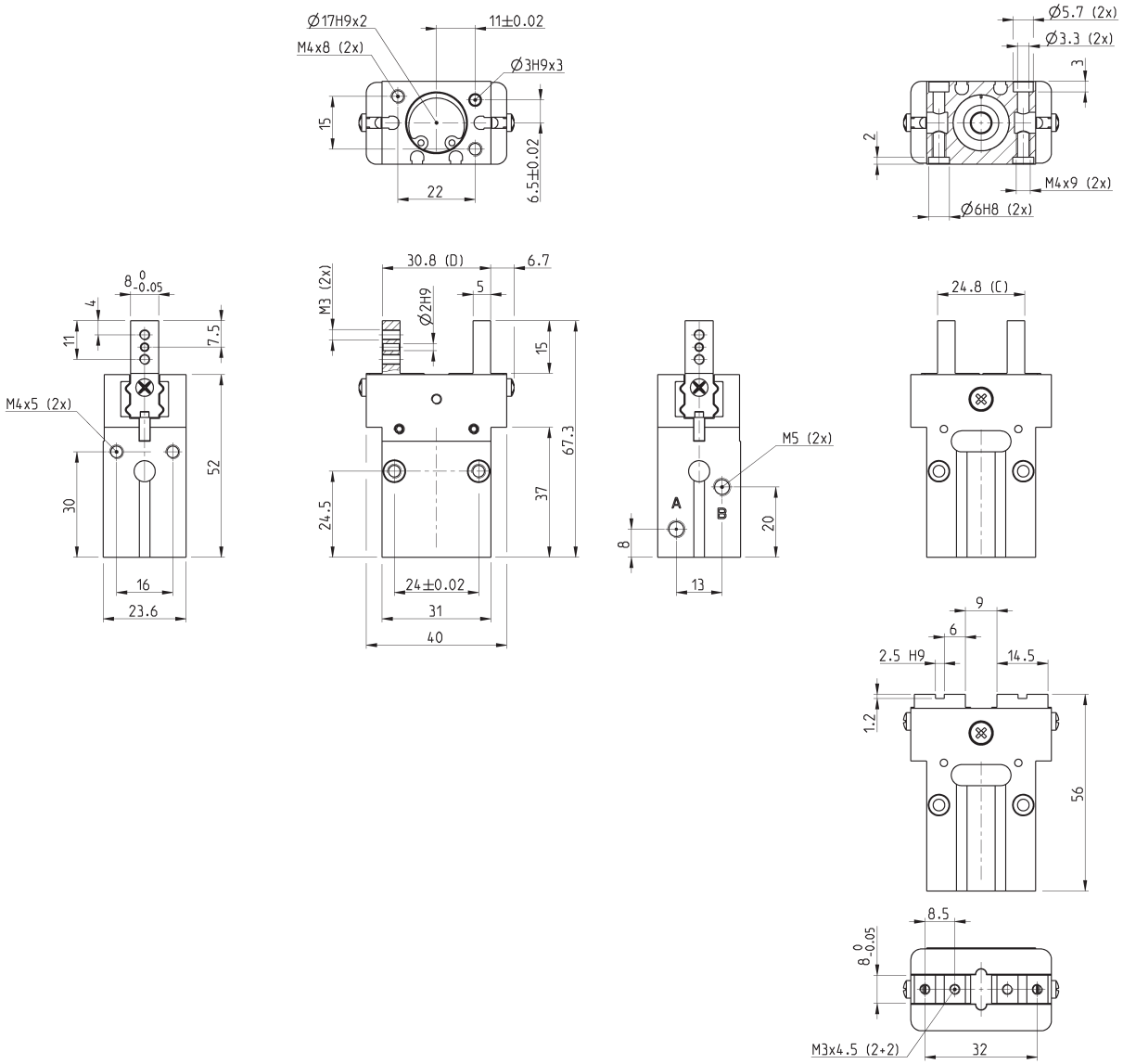

Mod.	Total closing gripping force at 6 bar (N)	Closing gripping force each jaw at 6 bar (N)	Total opening gripping force at 6 bar (N)	Opening gripping force each jaw at 6 bar (N)	Stroke per jaw (mm)	Working pressure (bar)	Working temperature (°C)	Repeatability (mm)	Max use frequency (Hz)	Weight (Kg)
CGPS-L-16	98	49	120	60	3	2 ÷ 8	5 ÷ 60	+/- 0.02	3	0.127
CGPS-F-16	98	49	120	60	3	2 ÷ 8	5 ÷ 60	+/- 0.02	3	0.130
CGPS-L-16-NC	115.4	57.7	95	47.5	3	4 ÷ 8	5 ÷ 60	+/- 0.02	3	0.129
CGPS-F-16-NC	115.4	57.7	95	47.5	3	4 ÷ 8	5 ÷ 60	+/- 0.02	3	0.133
CGPS-L-16-NO	71	35.5	133	68.5	3	4 ÷ 8	5 ÷ 60	+/- 0.02	3	0.129
CGPS-F-16-NO	71	35.5	133	68.5	3	4 ÷ 8	5 ÷ 60	+/- 0.02	3	0.133

CGPS gripper, size 20 mm - dimensions

DRAWING LEGEND:
A = Opening of air connection
B = Closing of air connection
C = Closed gripper
D = Open gripper

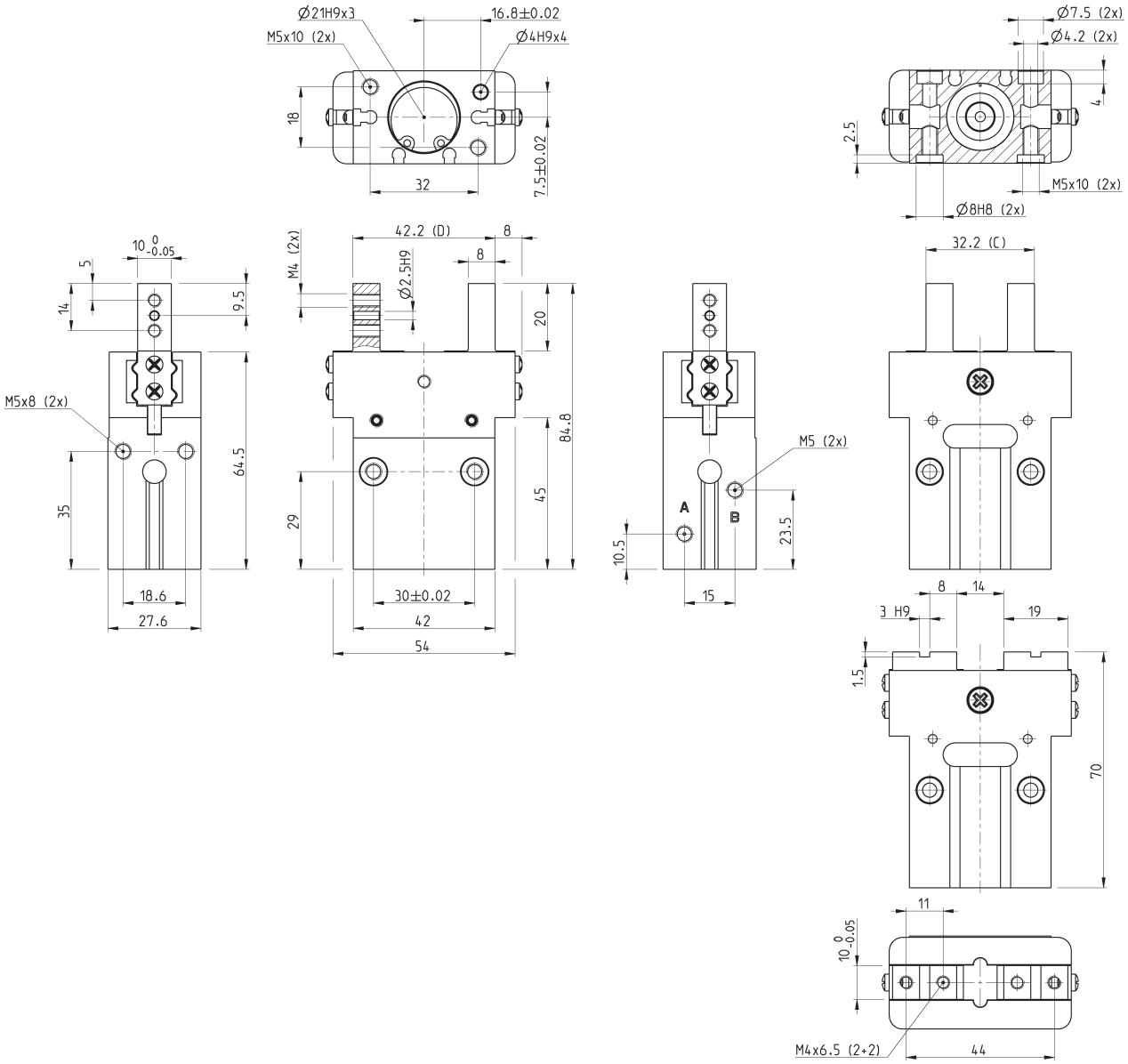

Mod.	Total closing gripping force at 6 bar (N)	Closing gripping force each jaw at 6 bar (N)	Total opening gripping force at 6 bar (N)	Opening gripping force each jaw at 6 bar (N)	Stroke per jaw (mm)	Working pressure (bar)	Working temperature (°C)	Repeatability (mm)	Max use frequency (Hz)	Weight (Kg)
CGPS-L-20	142	71	178	89	5	2 ÷ 8	5 ÷ 60	+/- 0.02	3	0.248
CGPS-F-20	142	71	178	89	5	2 ÷ 8	5 ÷ 60	+/- 0.02	3	0.258
CGPS-L-20-NC	169	84.5	141	70.5	5	4 ÷ 8	5 ÷ 60	+/- 0.02	3	0.252
CGPS-F-20-NC	169	84.5	141	70.5	5	4 ÷ 8	5 ÷ 60	+/- 0.02	3	0.262
CGPS-L-20-NO	103	51.5	205	102.5	5	4 ÷ 8	5 ÷ 60	+/- 0.02	3	0.252
CGPS-F-20-NO	103	51.5	205	102.5	5	4 ÷ 8	5 ÷ 60	+/- 0.02	3	0.262

CGPS gripper, size 25 mm - dimensions

DRAWING LEGEND:
A = Opening of air connection
B = Closing of air connection
C = Closed gripper
D = Open gripper

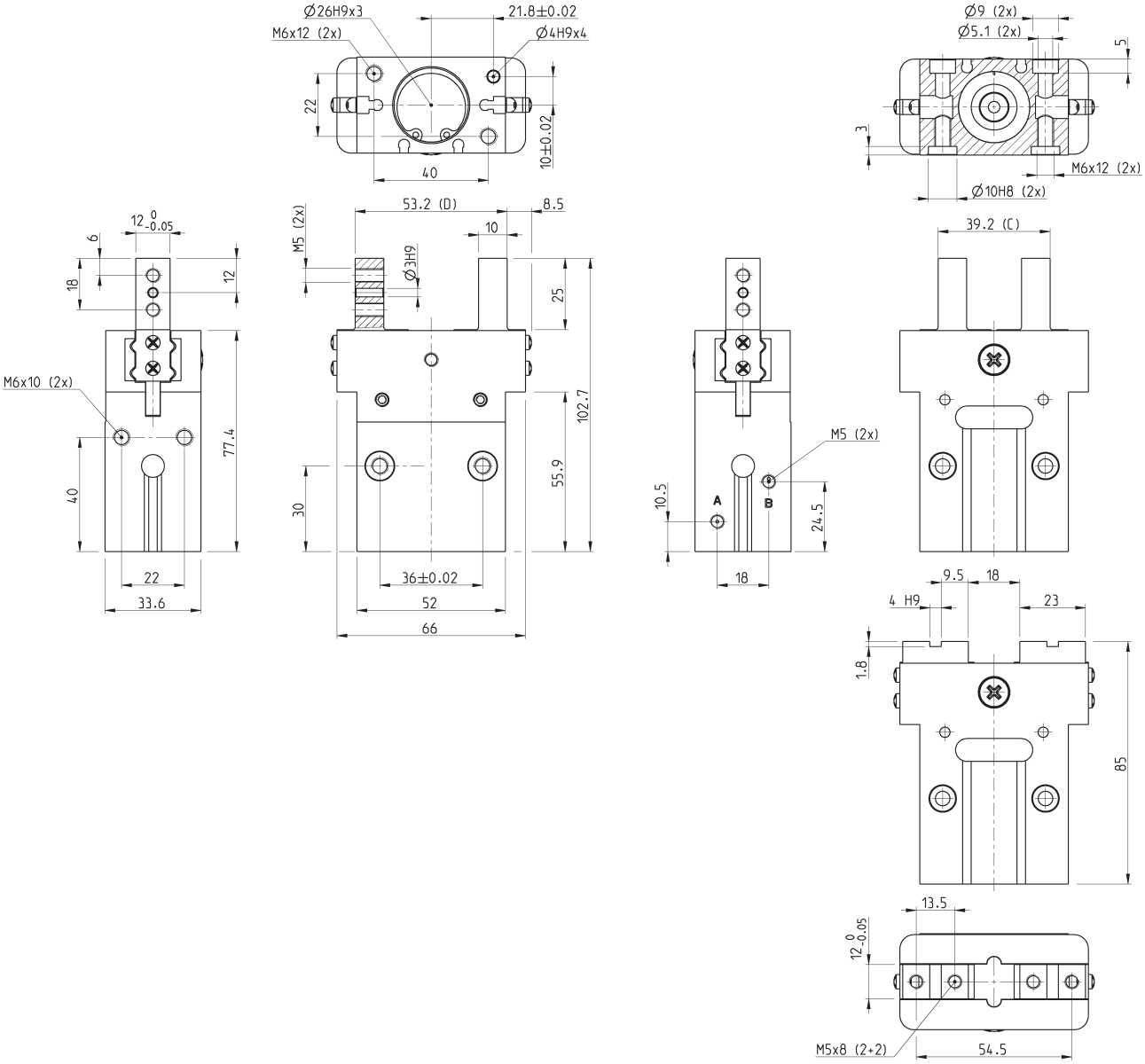

Mod.	Total closing gripping force at 6 bar (N)	Closing gripping force each jaw at 6 bar (N)	Total opening gripping force at 6 bar (N)	Opening gripping force each jaw at 6 bar (N)	Stroke per jaw (mm)	Working pressure (bar)	Working temperature (°C)	Repeatability (mm)	Max use frequency (Hz)	Weight (Kg)
CGPS-L-25	250	125	274	137	7	2 ÷ 8	5 ÷ 60	+/- 0.02	3	0.447
CGPS-F-25	250	125	274	137	7	2 ÷ 8	5 ÷ 60	+/- 0.02	3	0.464
CGPS-L-25-NC	286.4	143.2	222	111	7	4 ÷ 8	5 ÷ 60	+/- 0.02	3	0.456
CGPS-F-25-NC	286.4	143.2	222	111	7	4 ÷ 8	5 ÷ 60	+/- 0.02	3	0.471
CGPS-L-25-NO	200	100	304	152	7	4 ÷ 8	5 ÷ 60	+/- 0.02	3	0.456
CGPS-F-25-NO	200	100	304	152	7	4 ÷ 8	5 ÷ 60	+/- 0.02	3	0.471

CGPS gripper, size 32 mm - dimensions

DRAWING LEGEND:
A = Opening of air connection
B = Closing of air connection
C = Closed gripper
D = Open gripper

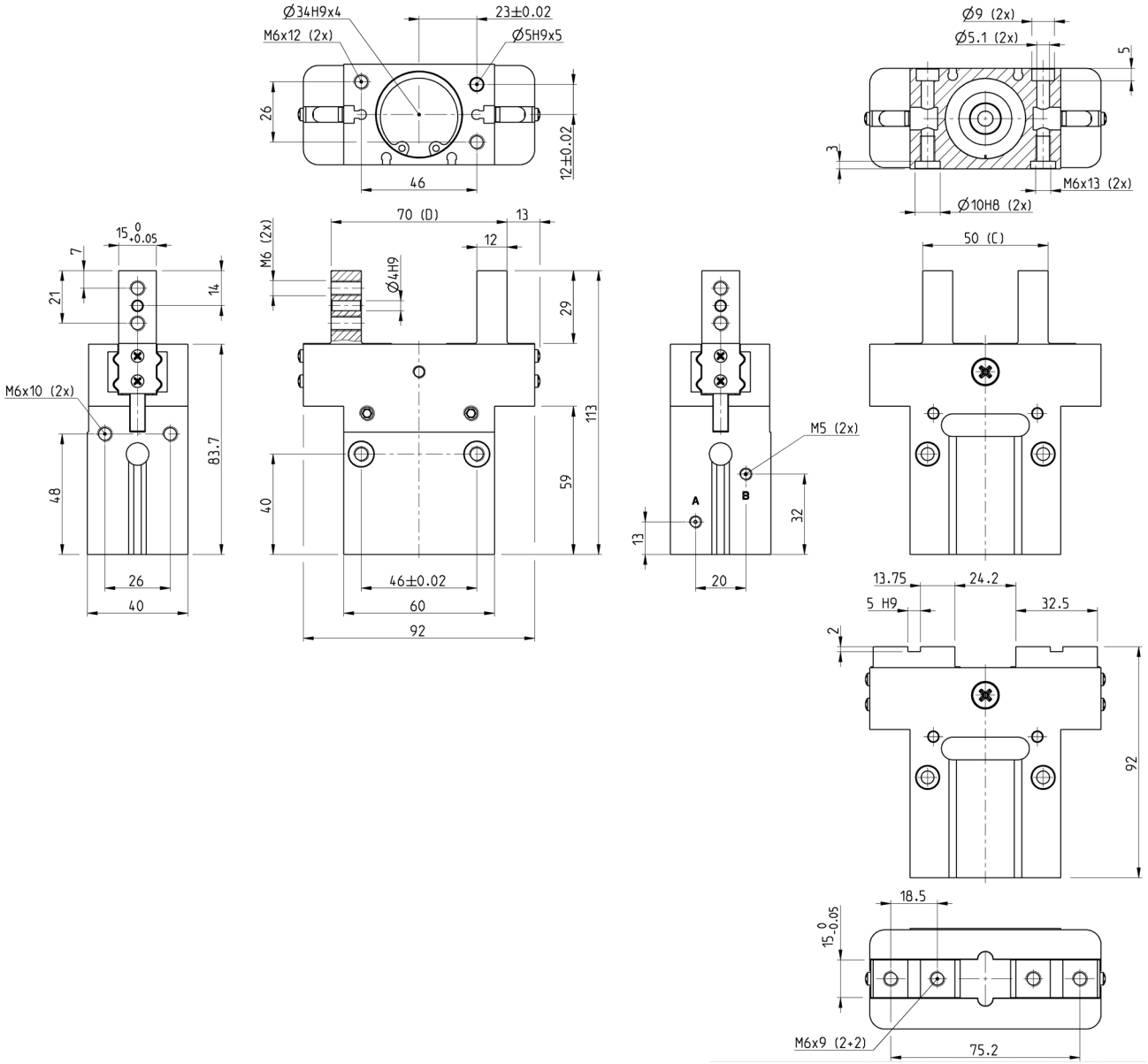

Mod.	Total closing gripping force at 6 bar (N)	Closing gripping force each jaw at 6 bar (N)	Total opening gripping force at 6 bar (N)	Opening gripping force each jaw at 6 bar (N)	Stroke per jaw (mm)	Working pressure (bar)	Working temperature (°C)	Repeatability (mm)	Max use frequency (Hz)	Weight (Kg)
CGPS-L-32	390	195	474	237	10	2 ÷ 8	5 ÷ 60	+/-0.02	2	0.729
CGPS-F-32	390	195	474	237	10	2 ÷ 8	5 ÷ 60	+/-0.02	2	0.753
CGPS-L-32-NC	424	212	420	210	10	4 ÷ 8	5 ÷ 60	+/-0.02	2	0.742
CGPS-F-32-NC	424	212	420	210	10	4 ÷ 8	5 ÷ 60	+/-0.02	2	0.768
CGPS-L-32-NO	334	167	512	256	10	4 ÷ 8	5 ÷ 60	+/-0.02	2	0.742
CGPS-F-32-NO	334	167	512	256	10	4 ÷ 8	5 ÷ 60	+/-0.02	2	0.768

Maximum admissible loads and torques on the gripper

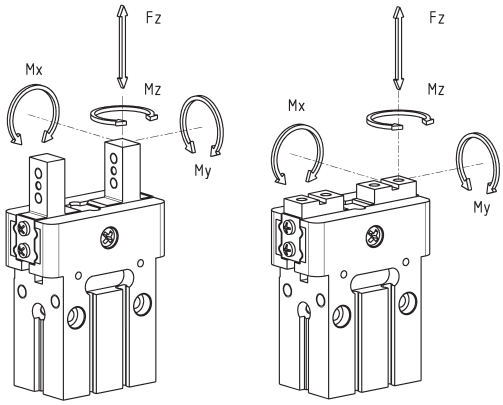

Maximum admissible loads and torques in static conditions				
Mod.	Fz (N)	Mx (Nm)	My (Nm)	Mz (Nm)
CGPS-10	90	0.53	2	0.21
CGPS-16	160	1.2	3	0.6
CGPS-20	170	2.4	3.5	1.0
CGPS-25	190	3.5	4.5	1.4
CGPS-32	360	5.5	6	2.5

GRIPPING POINT POSITION

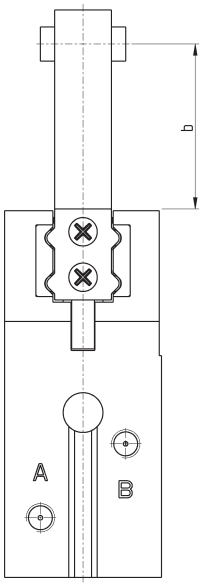

b = gripping point

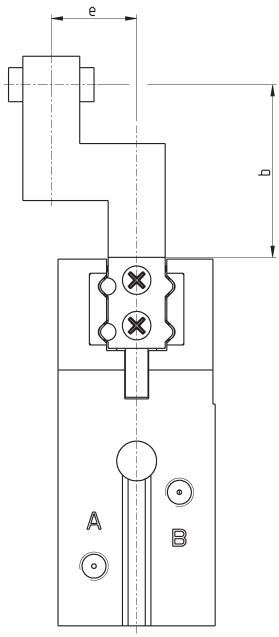

b = gripping point
e = arm

GRIPPING FORCES Mod. CGPS-..-10

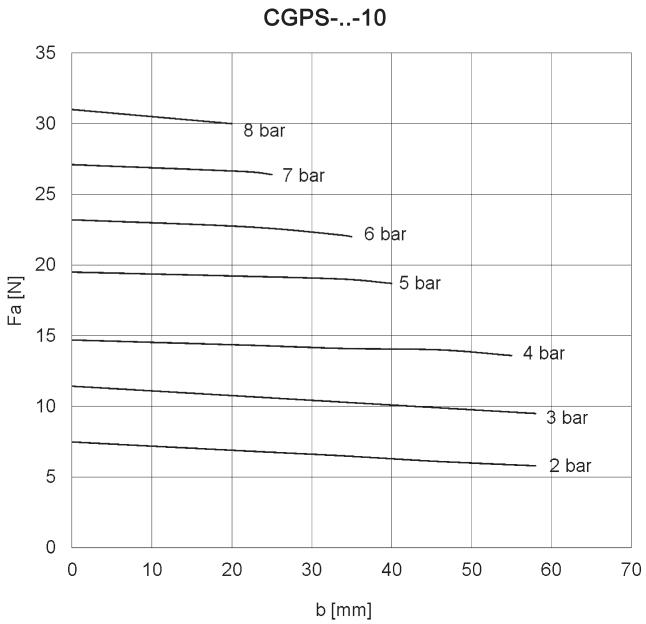

b = gripping point (mm)
Fa = opening gripping force (N)

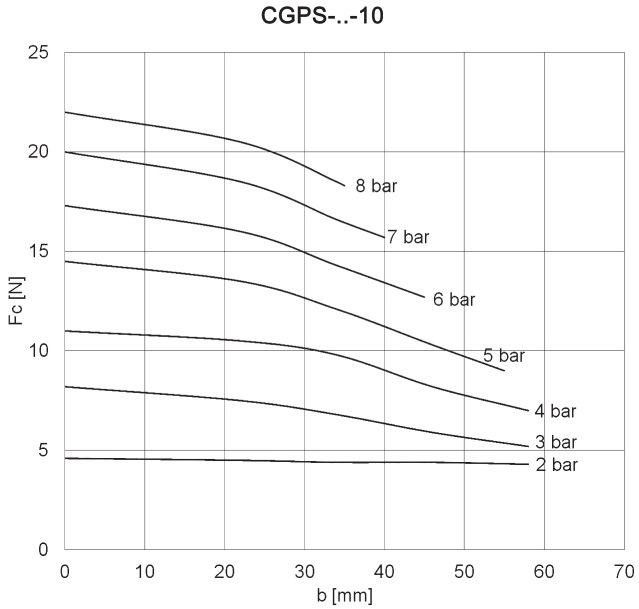

b = gripping point (mm)
Fc = Closing gripping force (N)

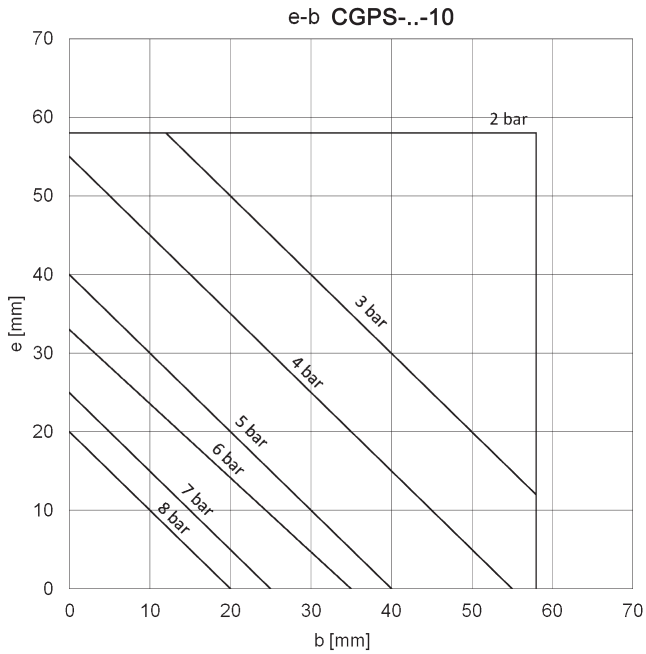

Opening gripping force

b = gripping point (mm)
e = arm (mm)

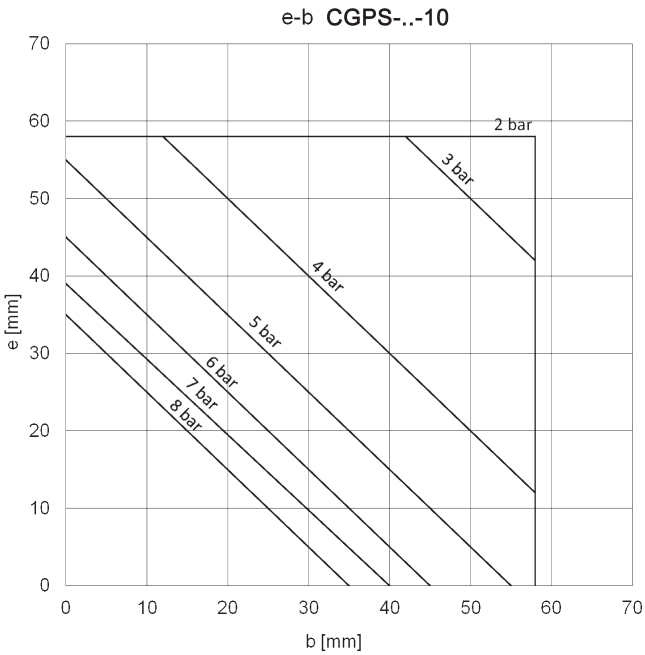

Closing gripping force

b = gripping point (mm)
e = arm (mm)

GRIPPING FORCES Mod. CGPS-..-16

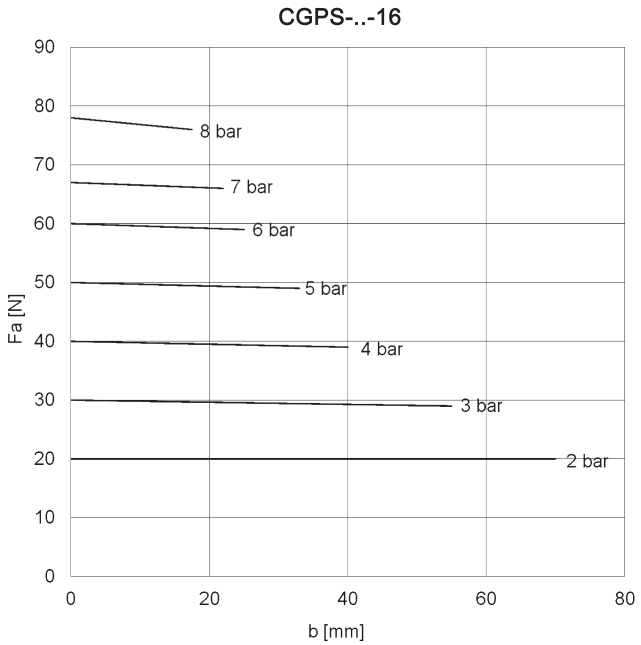

b = gripping point (mm)
Fa = opening gripping force (N)

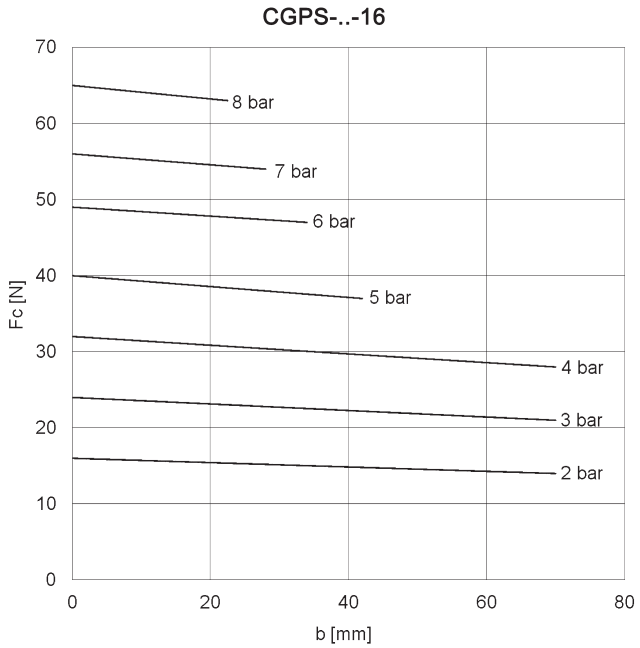

b = gripping point (mm)
Fc = closing gripping force (N)

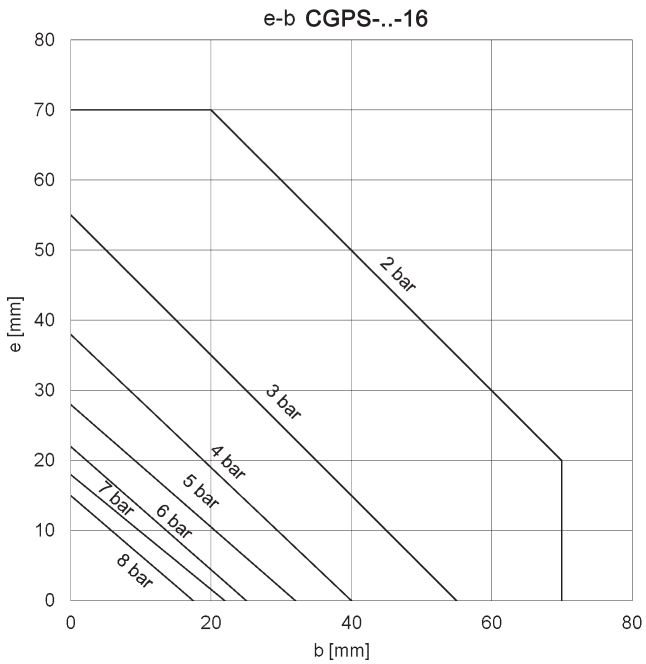

Opening gripping force

b = gripping point (mm)
e = arm (mm)

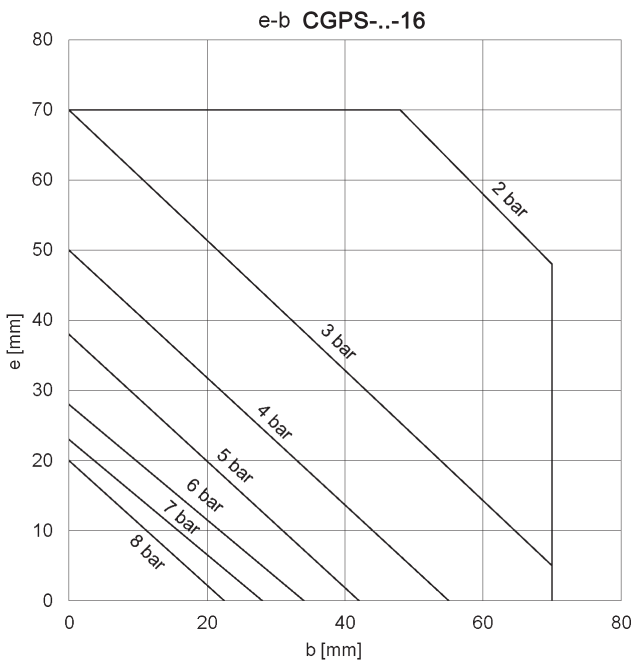

Closing gripping force

b = gripping point (mm)
e = arm (mm)

GRIPPING FORCES Mod. CGPS-..-20

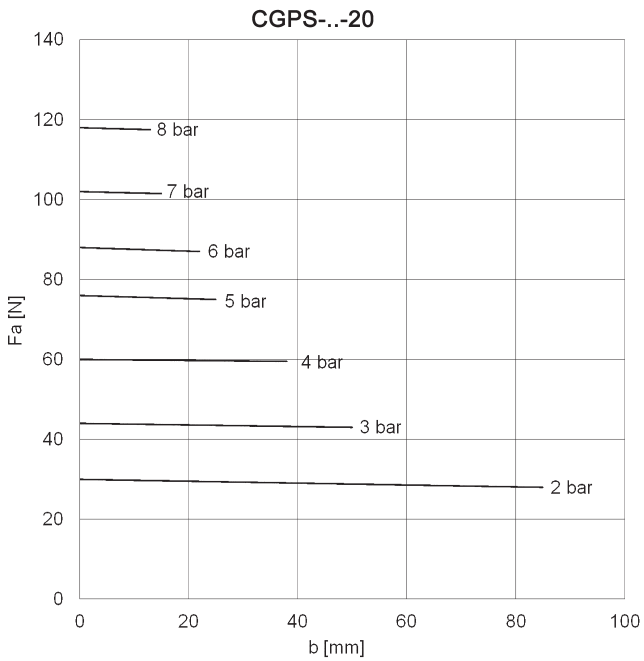

b = gripping point (mm)
Fa = opening gripping force (N)

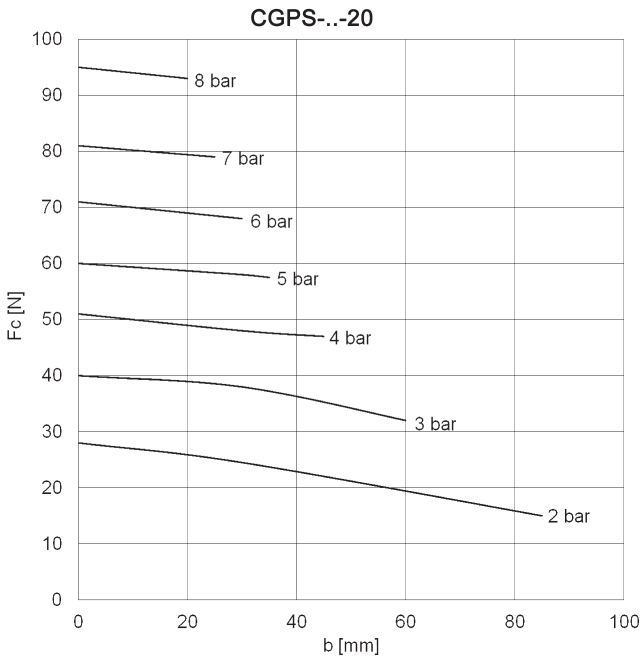

b = gripping point (mm)
Fc = closing gripping force (N)

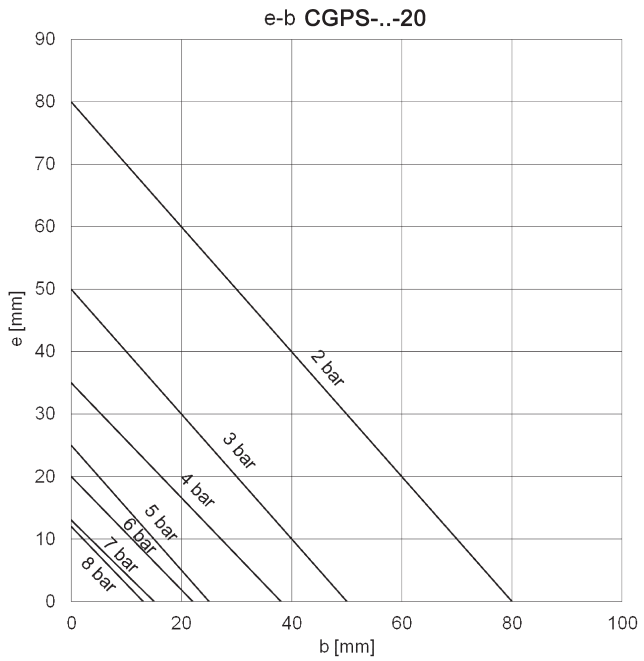

Opening gripping force

b = gripping point (mm)
e = arm (mm)

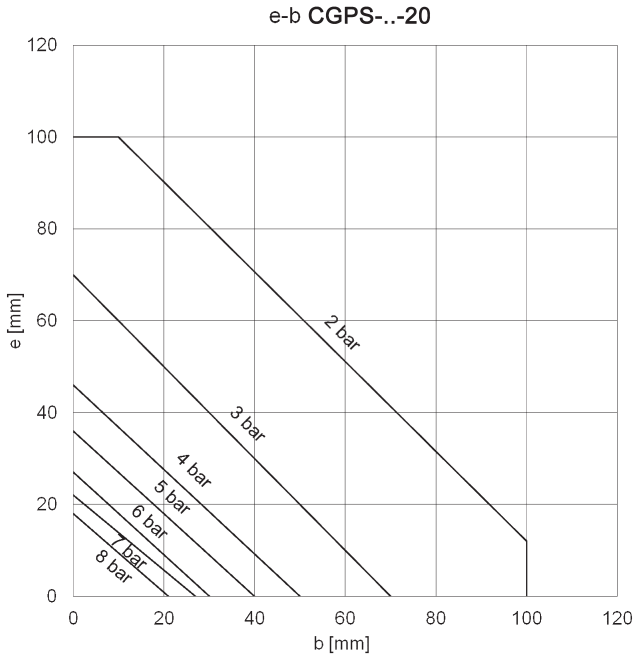

Closing gripping force

b = gripping point (mm)
e = arm (mm)

GRIPPING FORCES Mod. CGPS-..-25

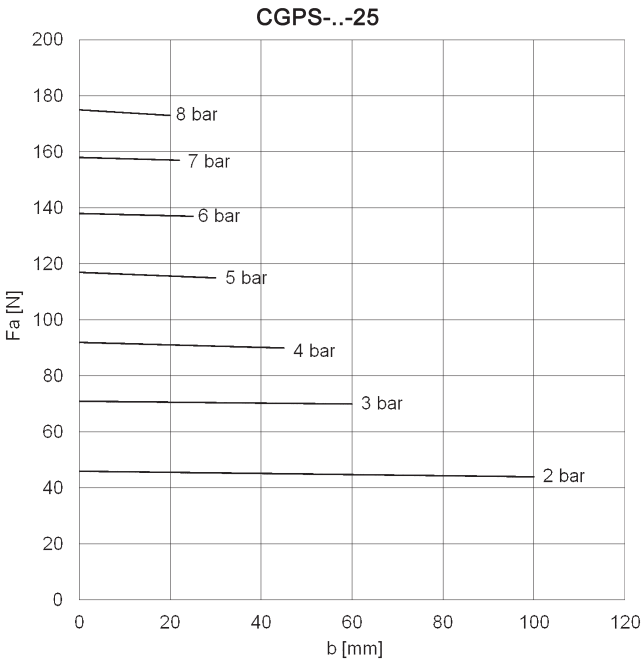

b = gripping point (mm)
Fa = opening gripping force (N)

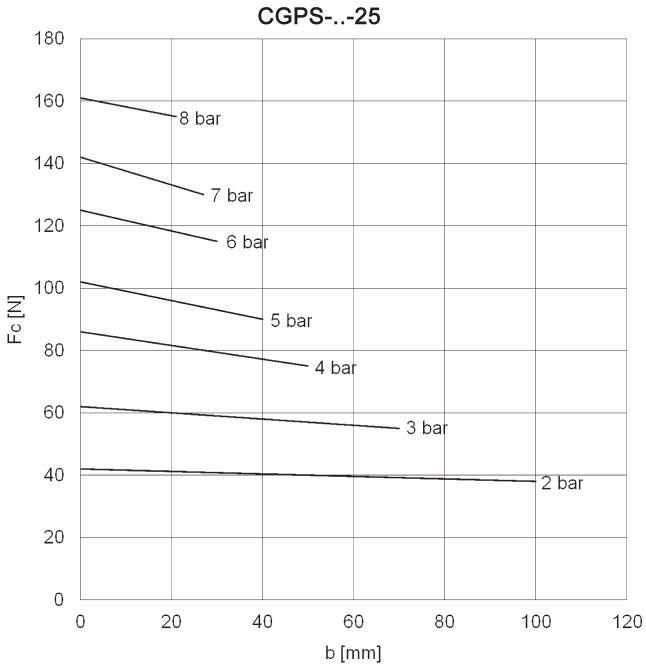

b = gripping point (mm)
Fc = closing gripping force (N)

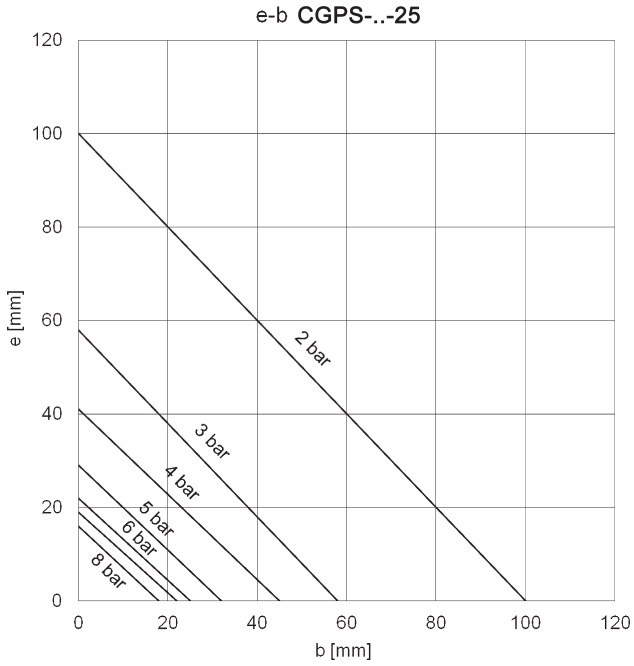

Opening gripping force

b = gripping point (mm)
e = arm (mm)

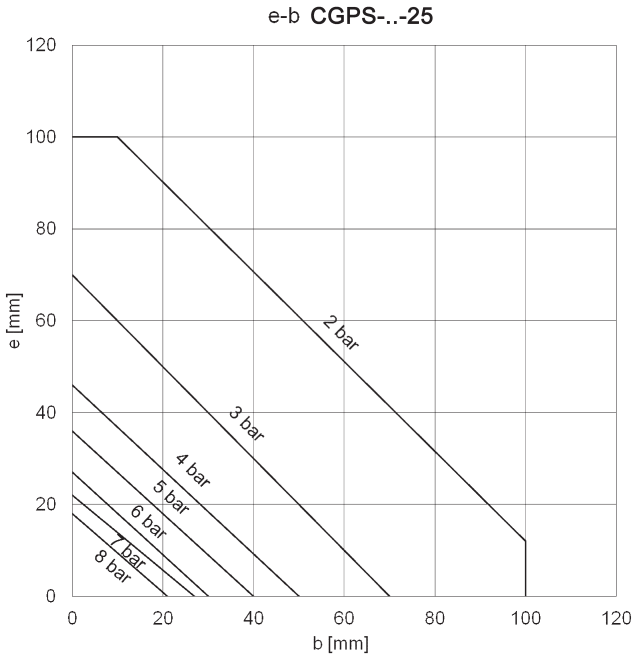

Closing gripping force

b = gripping point (mm)
e = arm (mm)

GRIPPING FORCES Mod. CGPS-..-32

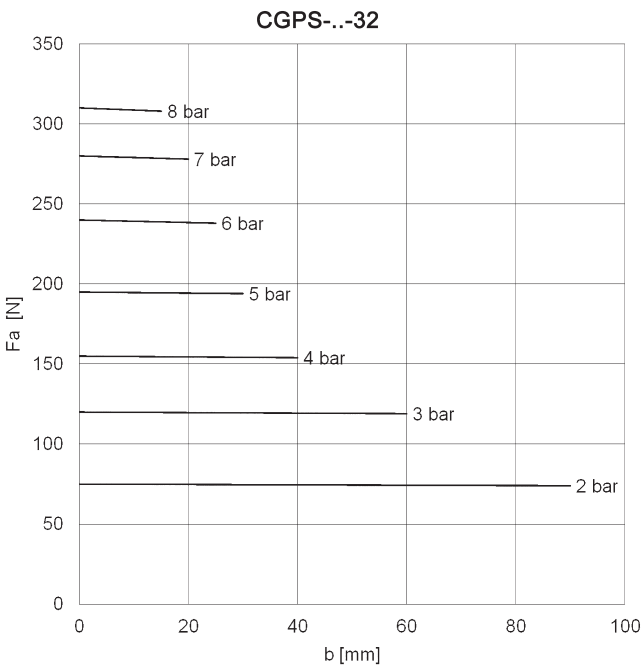

b = gripping point (mm)
Fa = opening gripping force (N)

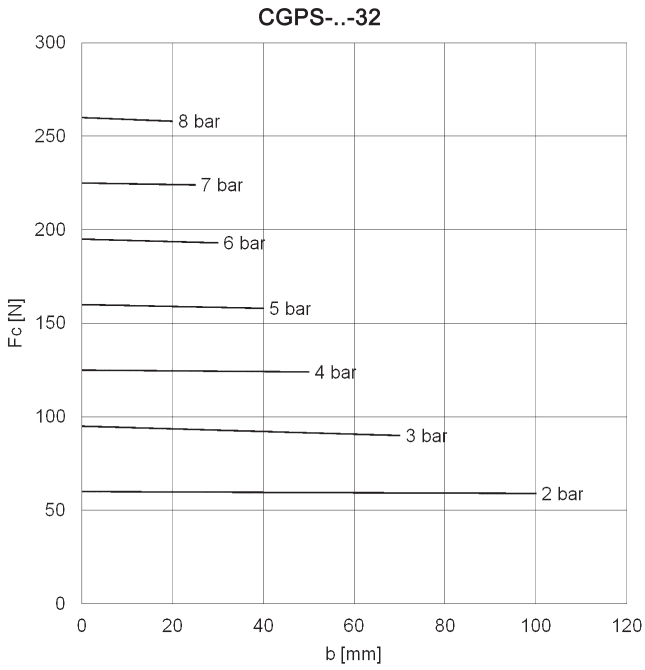

b = gripping point (mm)
Fc = closing gripping force (N)

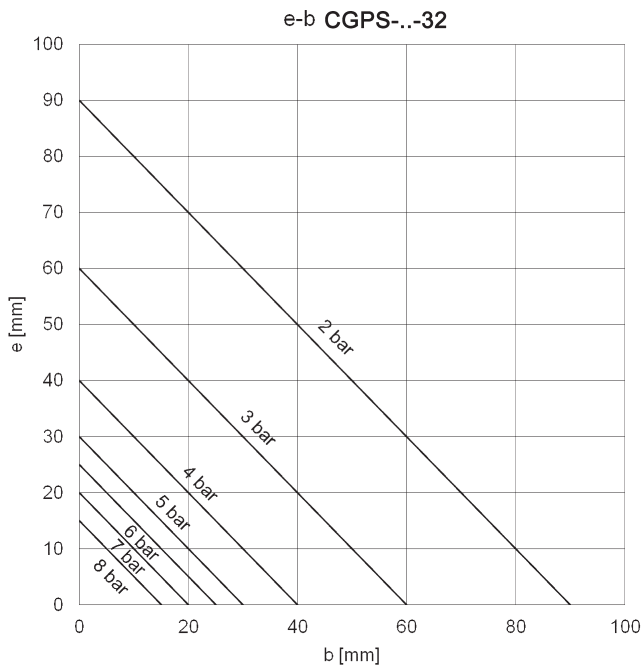

Opening gripping force

b = gripping point (mm)
e = arm (mm)

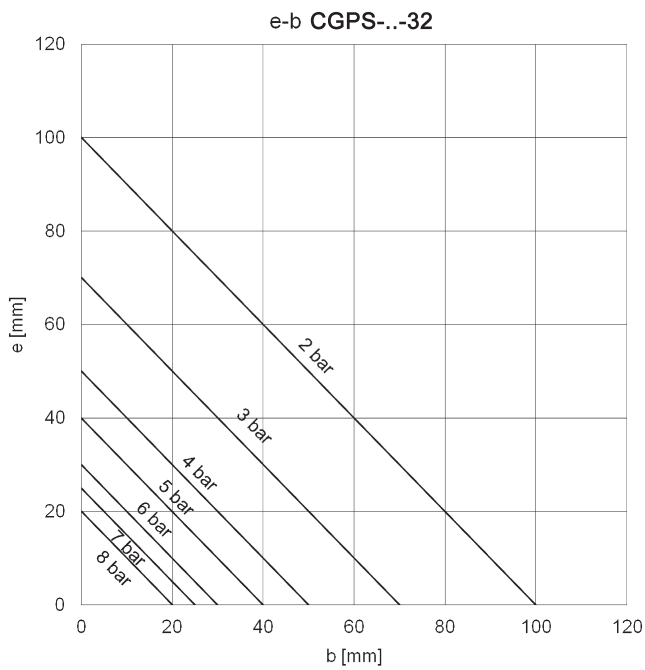

Closing gripping force

b = gripping point (mm)
e = arm (mm)

Examples of mounting

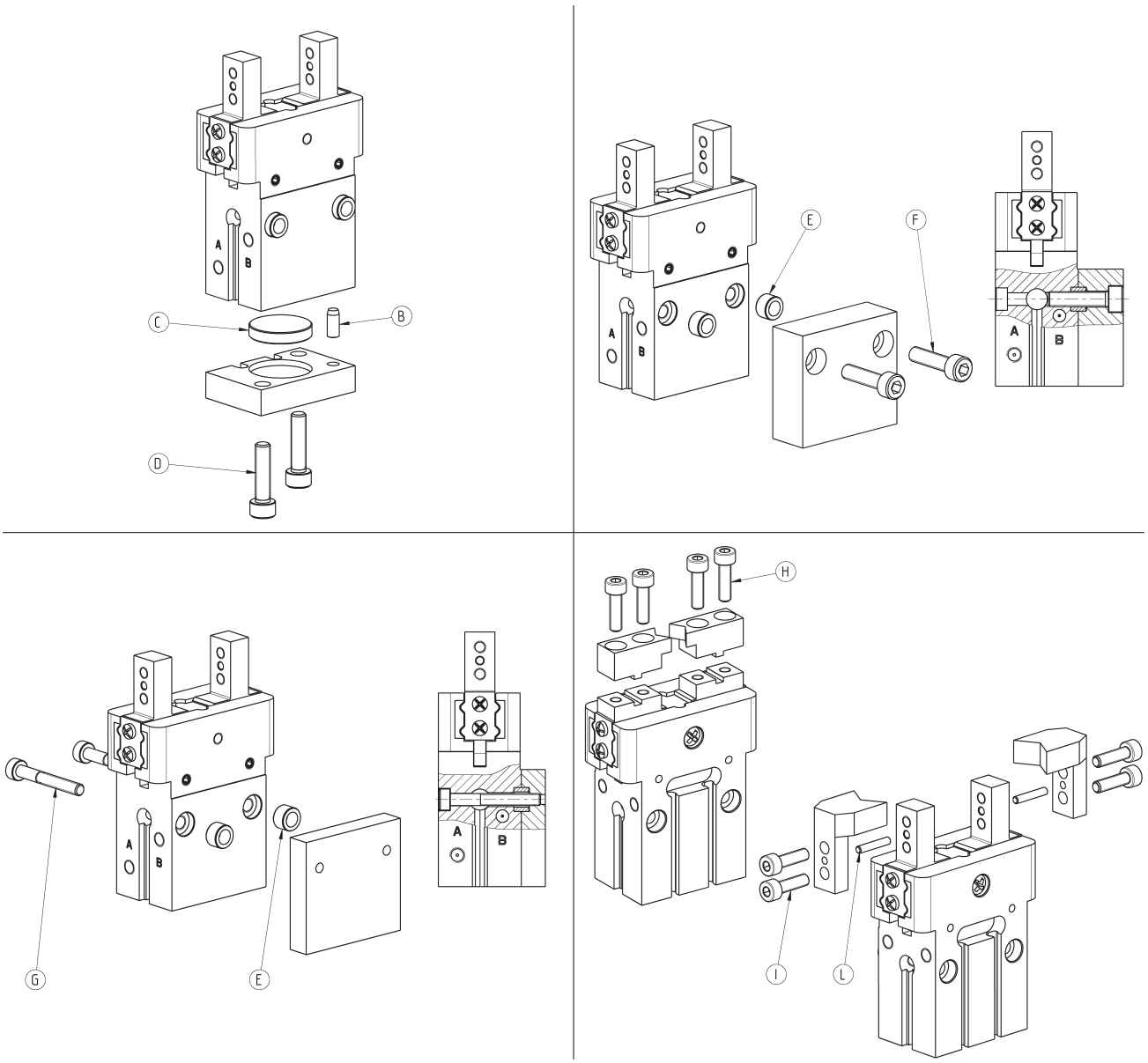

Mod.	B	C	D	E	Centering ring	F	G	H	I	L
CGPS-..-10	Ø2	Ø11	M3	Ø5	TR-CG-05	M3	M2.5	M2.5	M2.5	Ø1.5
CGPS-..-16	Ø3	Ø17	M4	Ø6	TR-CG-06	M4	M3	M3	M3	Ø2
CGPS-..-20	Ø4	Ø21	M5	Ø8	TR-CG-08	M5	M4	M4	M4	Ø2.5
CGPS-..-25	Ø4	Ø26	M6	Ø10	TR-CG-10	M6	M5	M5	M5	Ø3
CGPS-..-32	Ø5	Ø34	M6	Ø10	TR-CG-10	M6	M5	M6	M6	Ø4

Centering ring Mod. TR-CG

Supplied with:
2x centering rings in steel

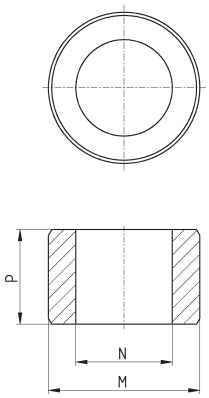

Mod.	M (h8)	N	P
TR-CG-04	Ø4	Ø2.6	2.5
TR-CG-05	Ø5	Ø3.1	3
TR-CG-06	Ø6	Ø4.1	4
TR-CG-08	Ø8	Ø5.1	5
TR-CG-10	Ø10	Ø6.1	6

Air supply ports

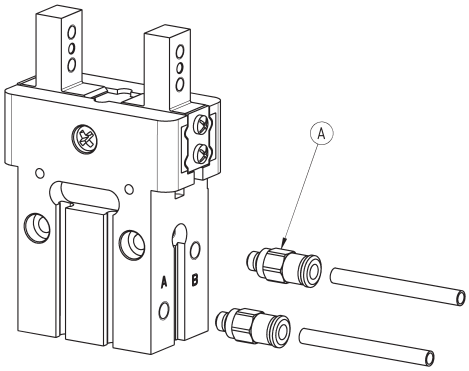

Mod.	A
CGPS-..-10	M3
CGPS-..-16	M5
CGPS-..-20	M5
CGPS-..-25	M5
CGPS-..-32	M5

Example of mounting: sensors

Z = sensor mod. CSD-332 or mod. CSD-362

In order to position the sensor correctly, a channel must be created in the base.

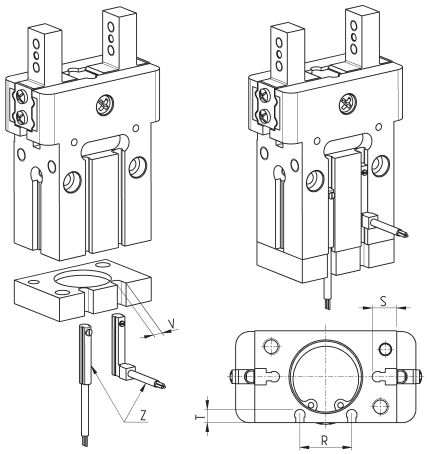

Mod.	R	S	T	V
CGPS-..-10	-	4.6	-	5
CGPS-..-16	11	4.8	3.8	5
CGPS-..-20	15	7	4.6	5
CGPS-..-25	19	9	4.8	5
CGPS-..-32	26	9	4.8	5

Mounting shaft Mod. C-CGPS

Supplied with:
1x aluminium shaft
2x steel fixing screws

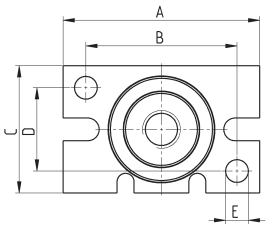

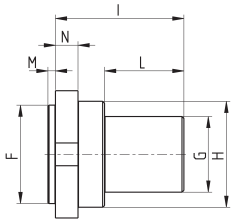

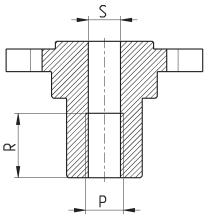

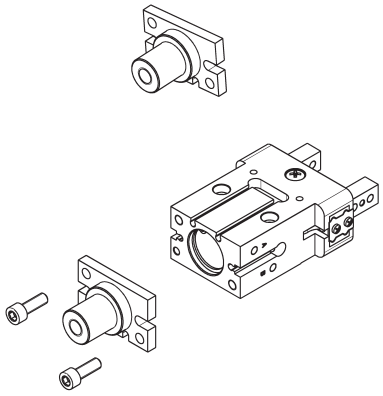

Mod.	A	B	C	D	E	F	G	H	I	L	M	N	P	R	S
C-CGPS-10	23	18	16.4	12	Ø3	Ø11	Ø10	Ø12.8	18.5	11	1.5	3.5	M6	10	Ø5
C-CGPS-16	31	22	23.6	15	Ø4	Ø17	Ø14	Ø17.8	25	16	1.5	4	M8	13	Ø6.8
C-CGPS-20	42	32	27.6	18	Ø5	Ø21	Ø20	Ø22	32	21	2	5	M10	17	Ø8.5
C-CGPS-25	52	40	33.6	22	Ø6	Ø26	Ø20	Ø28	34	21	2	6	M10	17	Ø8.5
C-CGPS-32	60	46	40	26	Ø6	Ø34	Ø30	Ø37	45	31	2	7	M16	25	Ø14

Extension for mounting shaft Mod. L-CGPS

Supplied with:
1x aluminium extension

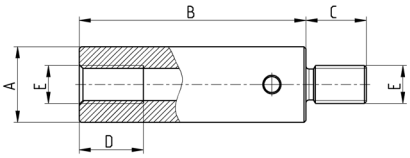

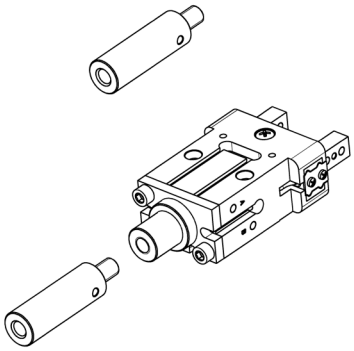

Mod.	A	B	C	D	E
L-CGPS-10	Ø10	40	9	10	M6
L-CGPS-16	Ø14	60	12	13	M8
L-CGPS-20/25	Ø20	60	16	17	M10
L-CGPS-32	Ø30	70	24	25	M16

Series CSD magnetic proximity switches with 3-wire cable

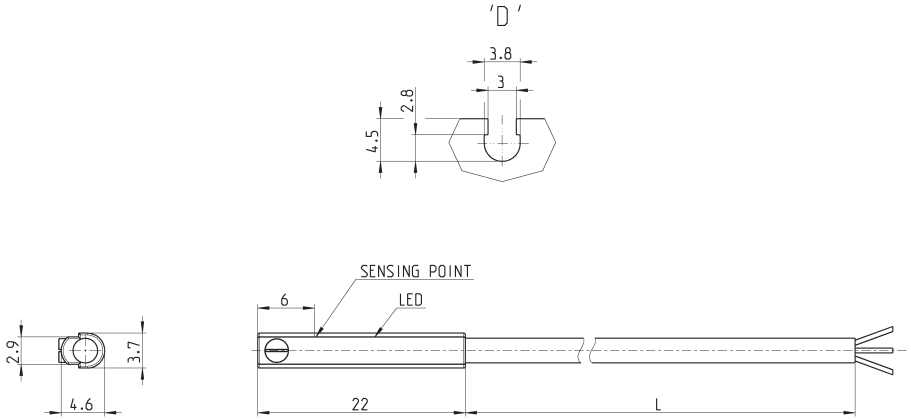

Mod.	Operation	Connections	Voltage	Output	Max. current	Max Load	Protection	L = length cable
CSD-332	Electronic	3 wires	10 ÷ 27 V DC	PNP	200 mA	6W	Against polarity reversing and overvoltage	2 m

Series CSD magnetic proximity switches with male connector M8

Length of cable 0.3 metres

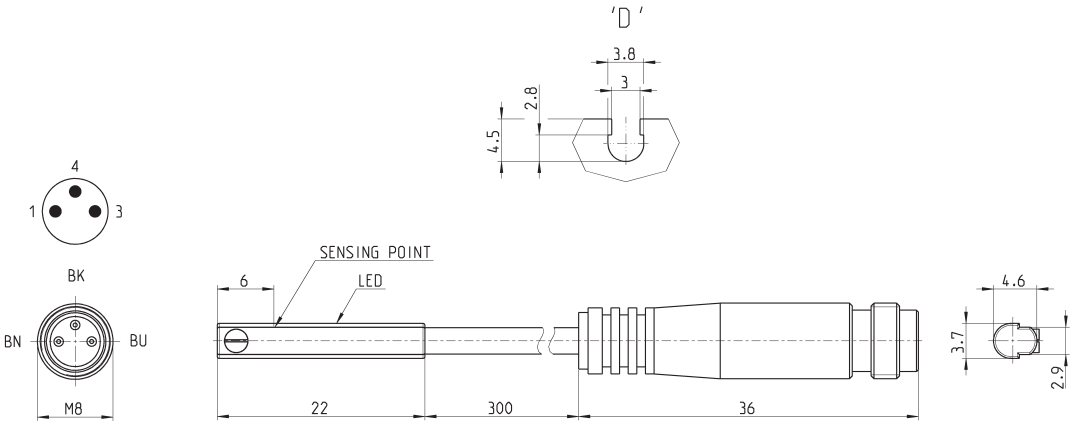

Mod.	Operation	Connection	Voltage	Output	Max. current	Max load	Protection
CSD-362	Electronic	3 wires with M8 connector	10 ÷ 27 V DC	PNP	200 mA	6W	Against polarity reversing and overvoltage

Series CGLN
wide opening parallel grippers

Bores: ø 10, 16, 20, 25, 32 mm

- High installation versatility
- Rack and pinion synchronized mechanism
- Sturdy and accurate construction

Series CGLN's double piston ensures a high gripping force from within a compact unit. The body of the gripper is complete of grooves to mount magnetic proximity switches (Series CSC).

The wide range of bores and strokes available allows to meet technical requirements at its best.
Repositioning of the gripper is made easier by the 2 calibrated holes provided in the jaws and by the 2 locating pins in the base.

GENERAL DATA

Operation	double effect
Working pressure	2 ÷ 8 bar (3 ÷ 8 bar for Ø10)
Working temperature	5°C ÷ 60°C
Lubrification	not required
Repeatibility	± 0.1 mm
Effective gripping force with pressure = 0.5MPa and gripping moment R = 40 mm (Ø 10-16-20-25) or = 80 mm (Ø 32)	Ø 10 = 15N Ø 16 = 45N Ø 20 = 75N Ø 25 = 125N Ø 32 = 225N
Air ports	Ø 10 - 16 - 20 - 25 = M5 Ø 32 = G1/8
Fluid	filtered air, without lubrication. If lubricated air is used, it is recommended to use oil ISO VG32. Once applied, the lubrication should never be interrupted.

CODING EXAMPLE

CGLN	-	**20**	-	**040**

CGLN	SERIES	PNEUMATIC SYMBOL PNZ1
20	SIZES: 10 = ø 10 mm 16 = ø 16 mm 20 = ø 20 mm 25 = ø 25 mm 32 = ø 32 mm	
040	STROKE	

PNEUMATIC SYMBOLS

The pneumatic symbols which have been indicated in the CODING EXAMPLE are shown below.

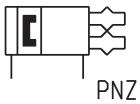

PNZ1

Series CGLN Gripper - construction

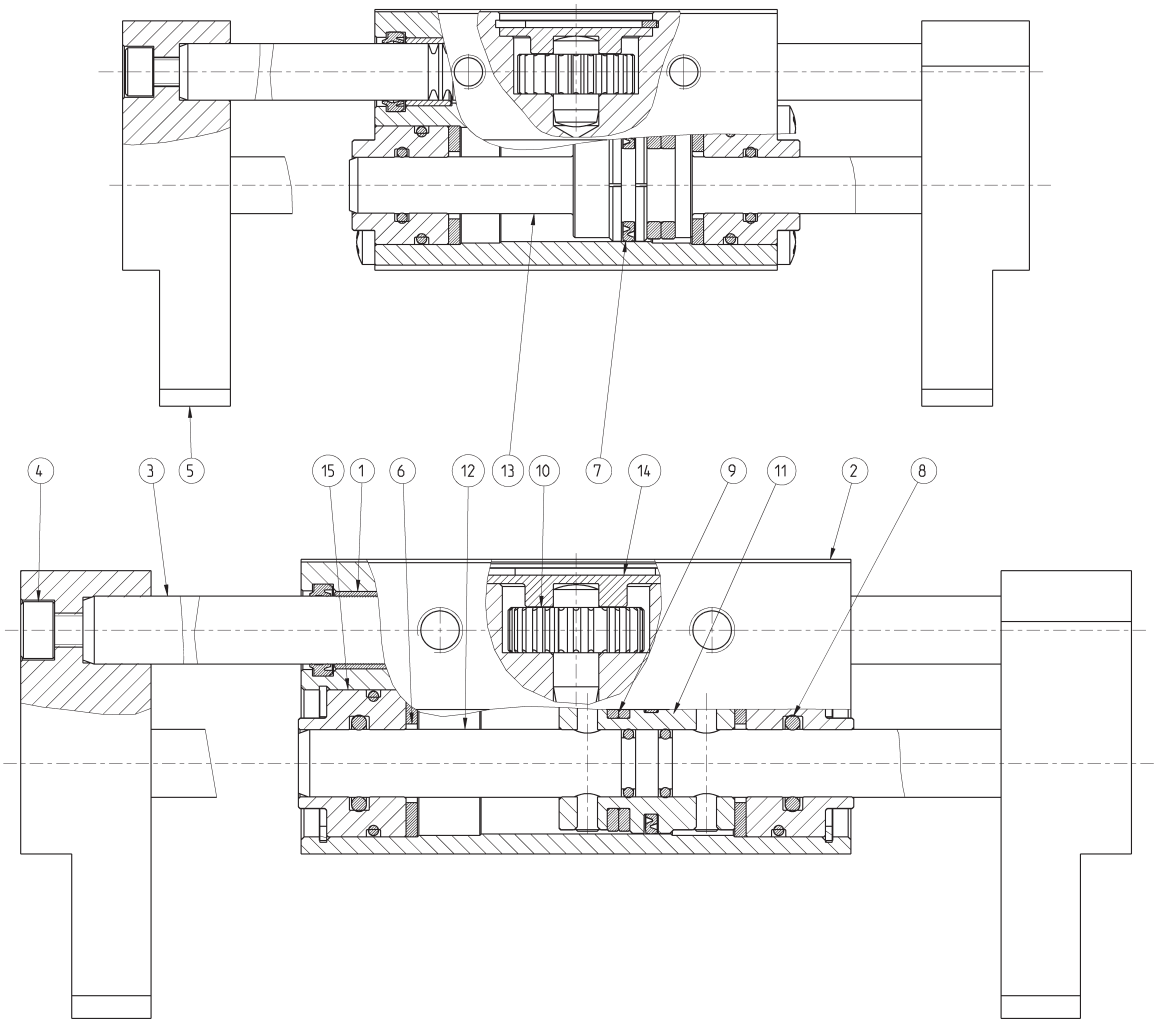

LIST OF COMPONENTS	
PARTS	MATERIALS
1 - Bushing	Bronce
2 - Body	Aluminium
3 - Rack	Stainless steel
4 - Fixing screw	Steel
5 - Gripping flange	Aluminium
6 - Buffer seal	PU
7 - Piston seal	NBR
8 - Rod seal	NBR
9 - Magnet	Plastoferrite
10 - Pinion	Steel
11 - Piston	Aluminium
12 - Rod	Stainless steel
13 - Rod-piston	Stainless steel
14 - Plug	Aluminium
15 - Header	Steel

Sizing criteria: 1) GRIPPING FORCE ANALYSIS

The selection of the size of the gripper has to be carried out according to the weight of the object that has to be moved. It is strongly recommended to select a gripper bore able to develop a gripping force at least 20 times higher than the weight of the object. In case of great acceleration or impact during the moving of the object, it is necessary to increase the factor of safety.

EXAMPLE OF CALCULATION (see the diagram on the right)
Size of the object to be moved (side x side) = 200 m x 20 mm
Weight of the object to be moved (Kg) = 0.3
Factor of safety = 20
Gripping moment R (mm) = 70
Working pressure (MPa) = 0.5
Minimum required gripping force Fmin = 0.3kg x 20 x 9.8m/s² = 60N

Through the diagrams "Effective Gripping force" we deduce from the above mentioned conditions that the gripping force with the mod. CGLN-20 is 73N, that is 24 times the weight of the object.
The condition requiring that gripping force is at least 20 times higher than the set gripping force is thus satisfied.
Once the gripper size is chosen, select a stroke that allows to have a maximum opening which is wider than the size of the object to be moved.
In the case above the gripper CGLN-20-80 is the right choice.
F = 220 mm > 200 mm

ACTUAL GRIPPING FORCE (F)
The shown gripping force corresponds to the gripping force of a finger when all fingers (or accessories) are in contact with the load.
F = Pushing force of 1 finger

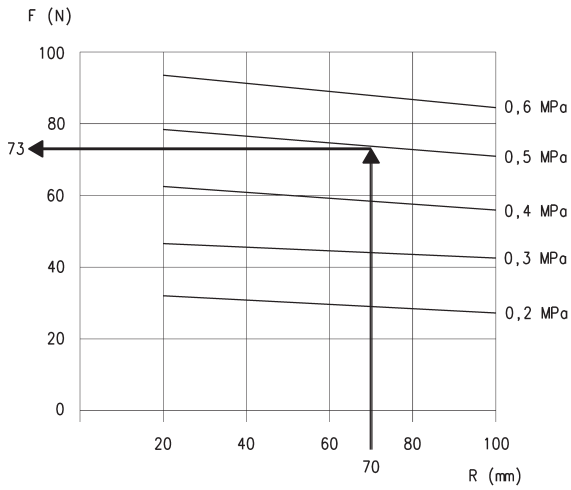

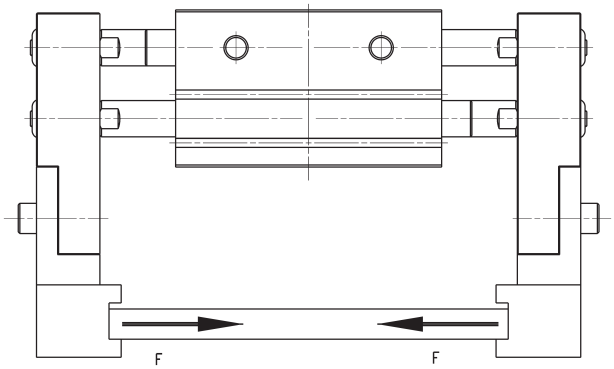

Sizing criteria: 2) GRIPPING DISTANCE ANALYSIS

The R gripping distance of the object has to meet the parameters of the lines of force which are indicated for each pressure in the diagrams "Effective grip force".
If the R distance is exceeded, the load applied will be too much overhanging, thus causing the screws to loosen as well as a reduced component life.

R = gripping distance (mm)

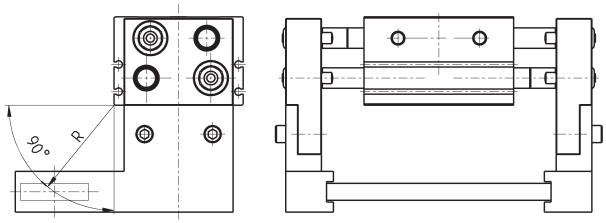

Gripping force for bore 10

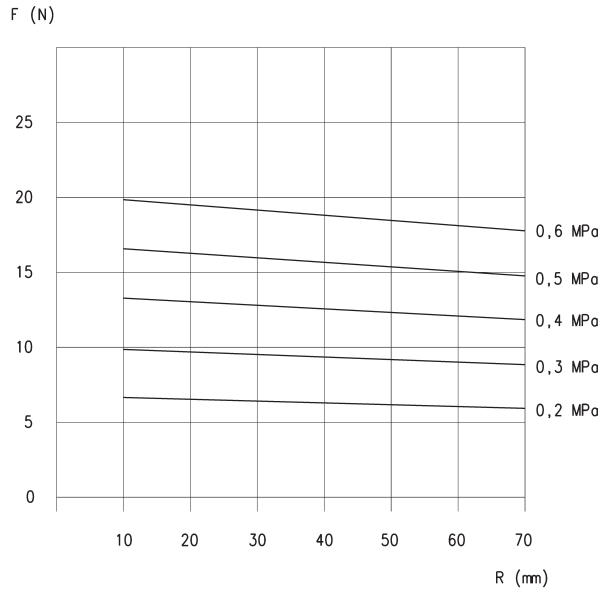

CGLN-10-020

F = Gripping force (N)
R = Gripping moment (mm)

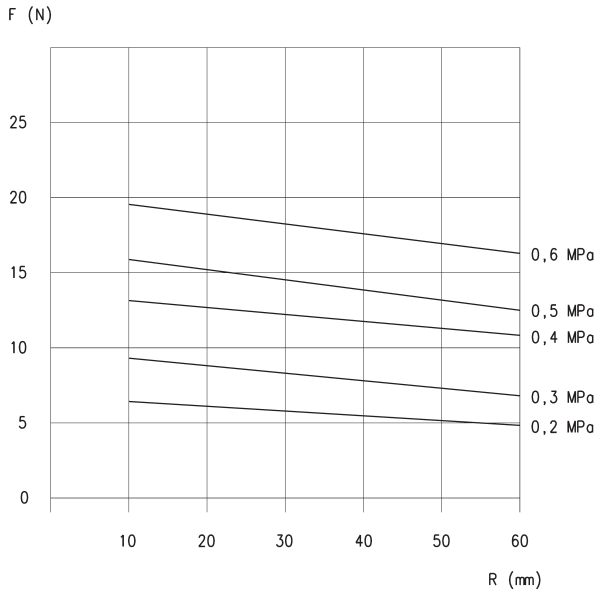

CGLN-10-040 and CGLN-10-060

F = Gripping force (N)
R = Gripping moment (mm)

Gripping force for bore 16

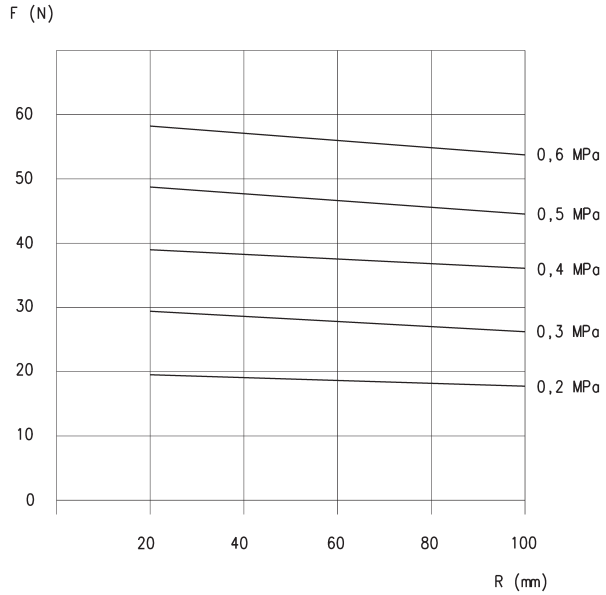

CGLN-16-030

F = Gripping force (N)
R = Gripping moment (mm)

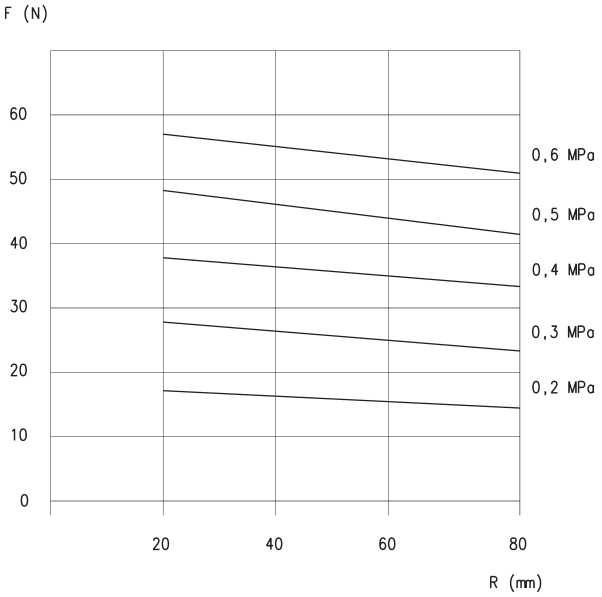

CGLN-16-060 and CGLN-16-080

F = Gripping force (N)
R = Gripping moment (mm)

Gripping force for bore 20

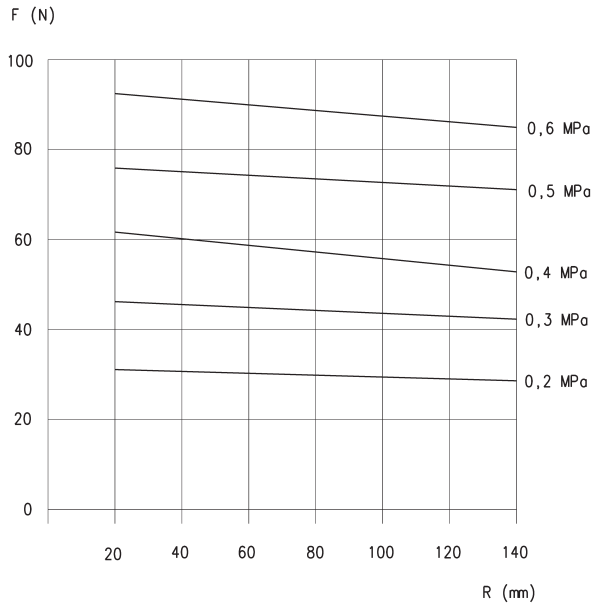

CGLN-20-040

F = Gripping force (N)
R = Gripping moment (mm)

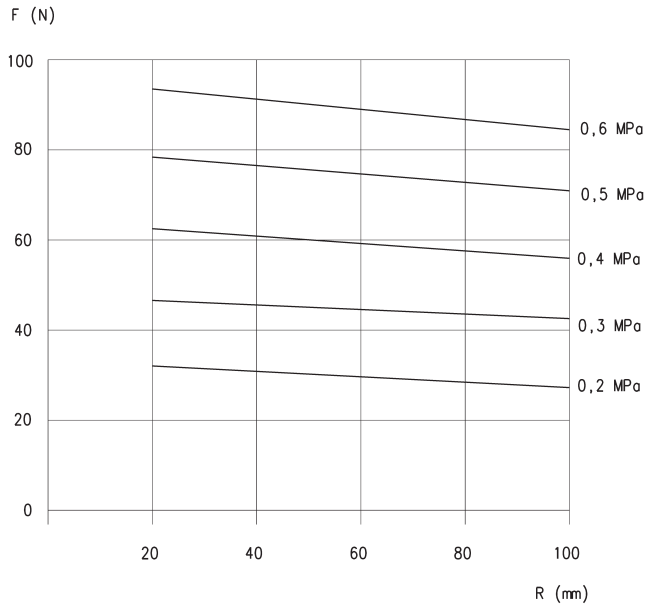

CGLN-20-080 and CGLN-20-100

F = Gripping force (N)
R = Gripping moment (mm)

Gripping force for bore 25

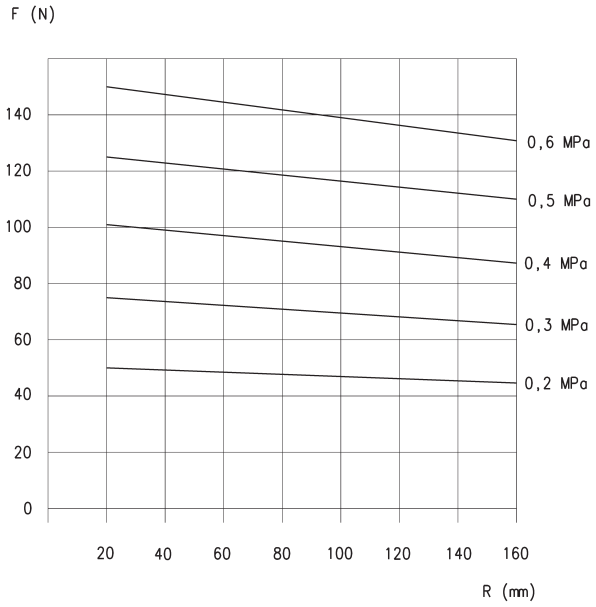

CGLN-25-050

F = Gripping force (N)
R = Gripping moment (mm)

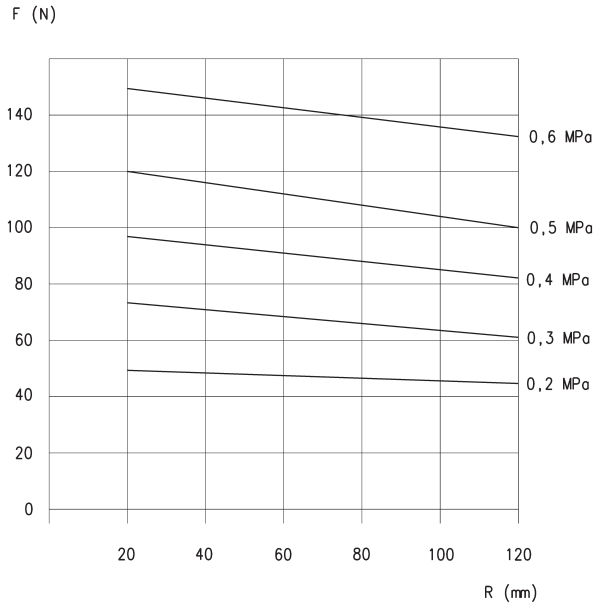

CGLN-25-100 and CGLN-25-120

F = Gripping force (N)
R = Gripping moment (mm)

Gripping force for bore 32

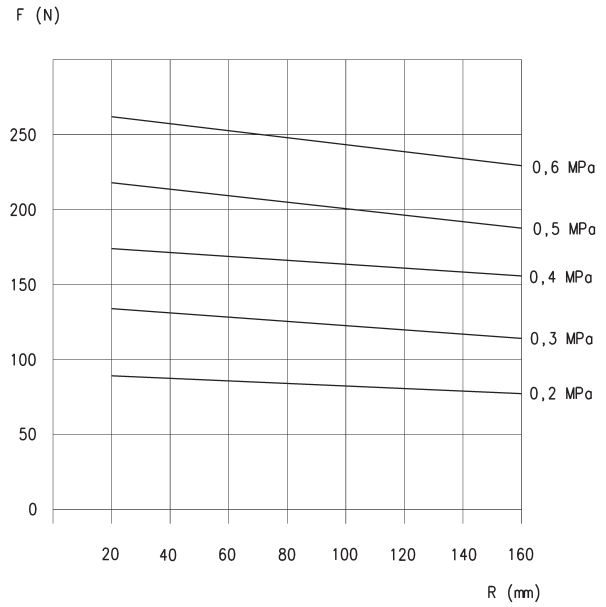

CGLN-32-070

F = Gripping force (N)
R = Gripping moment (mm)

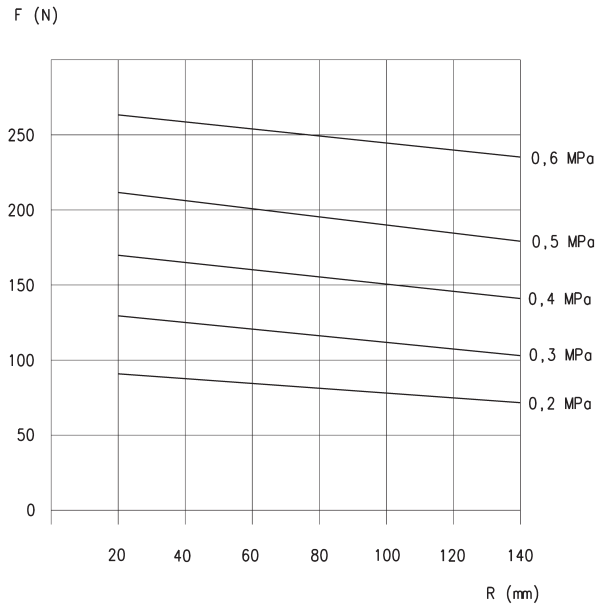

CGLN-32-120 and CGLN-32-170

F = Gripping force (N)
R = Gripping moment (mm)

CGLN gripper, bore 10 mm - dimensions

DRAWING LEGEND:

* = depth of the mounting threads
** = thread for the accessory mounting
*** = opening/closing of air connections

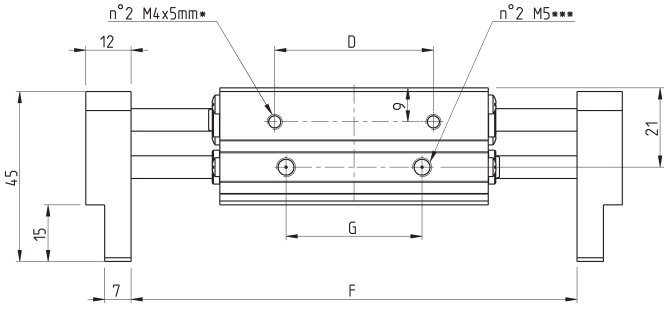

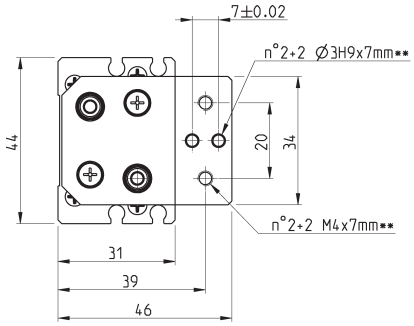

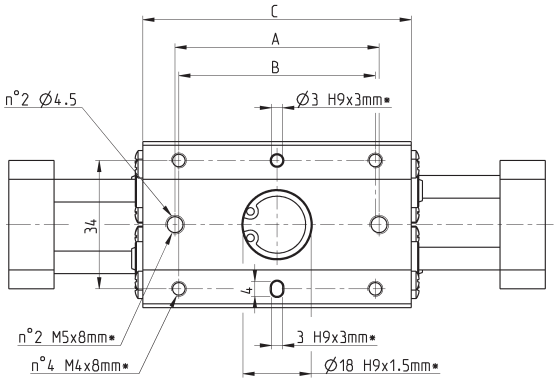

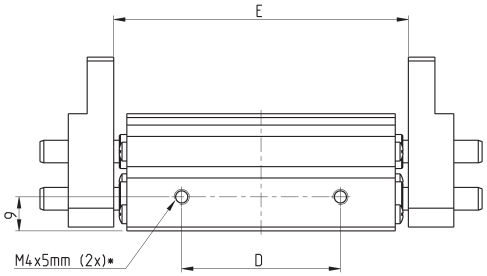

Mod.	Bore	Total stroke	A	B	C	D	E (Closed) Min opening	F (Open) Max opening	G	Max frequency (cycles/min)	Weight (g)
CGLN-10-020	10	20	38	36	51	26	56	76	20	60	310
CGLN-10-040	10	40	54	52	71	42	78	118	36	40	390
CGLN-10-060	10	60	72	70	89	60	96	156	54	40	460

CGLN gripper, bore 16 mm - dimensions

DRAWING LEGEND:

* = depth of the mounting threads
** = thread for the accessory mounting
*** = opening/closing of air connections

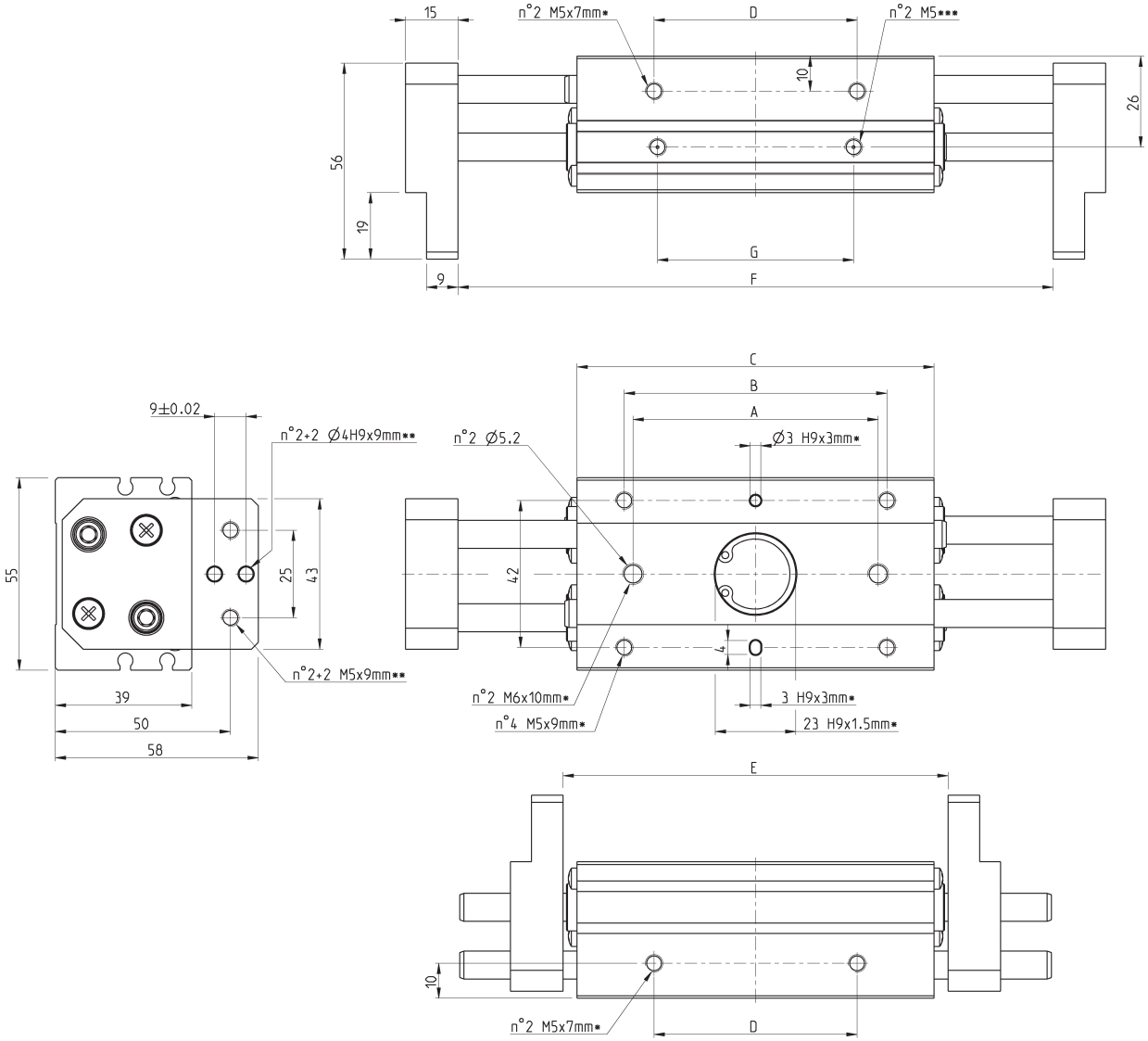

Mod.	Bore	Total stroke	A	B	C	D	E (Closed) Min opening	F (Open) Max opening	G	Max frequency (cycles/min)	Weight (g)
CGLN-16-030	16	30	40	45	60	28	68	98	26	60	590
CGLN-16-060	16	60	70	75	102	58	110	170	56	40	890
CGLN-16-080	16	80	90	95	122	78	130	210	76	40	1020

CGLN gripper, bore 20 mm - dimensions

DRAWING LEGEND:

* = depth of the mounting threads
** = thread for the accessory mounting
*** = opening/closing of air connections

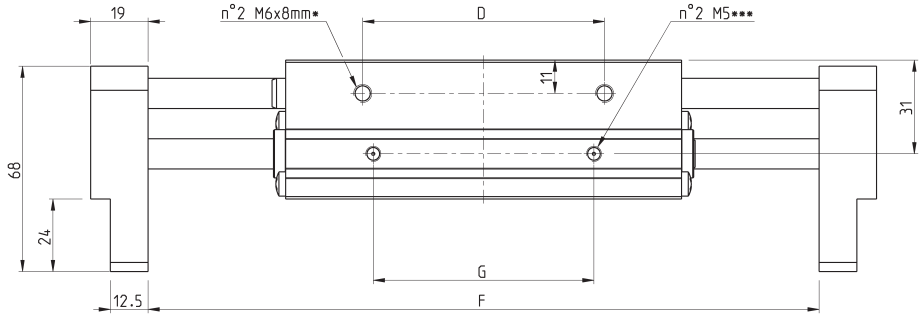

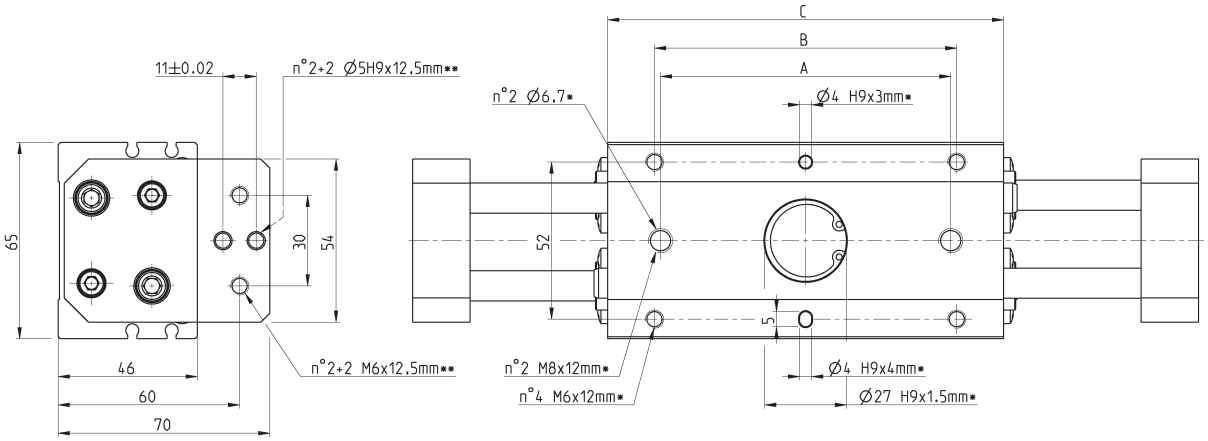

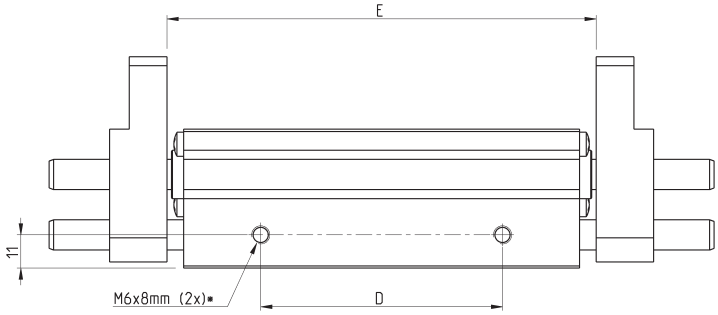

Mod.	Bore	Total stroke	A	B	C	D	E (Closed) Min opening	F (Open) Max opening	G	Max frequency (cycles/min)	Weight (g)
CGLN-20-040	20	40	54	58	71	38	82	122	31	60	1080
CGLN-20-080	20	80	96	100	131	80	142	222	73	40	1670
CGLN-20-100	20	100	116	120	151	100	162	262	93	40	1890

CGLN gripper, bore 25 mm - dimensions

DRAWING LEGEND:

* = depth of the mounting threads
** = thread for the accessory mounting
*** = opening/closing of air connections

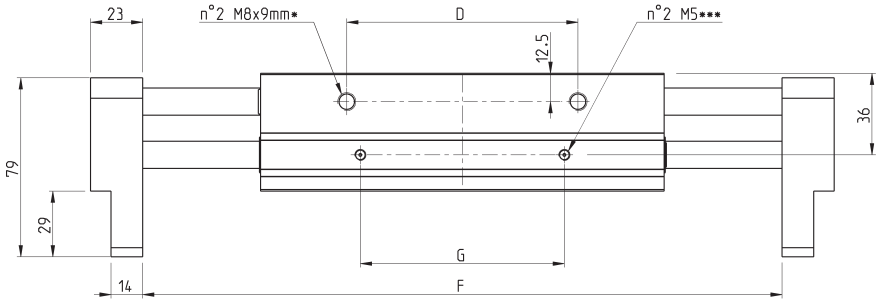

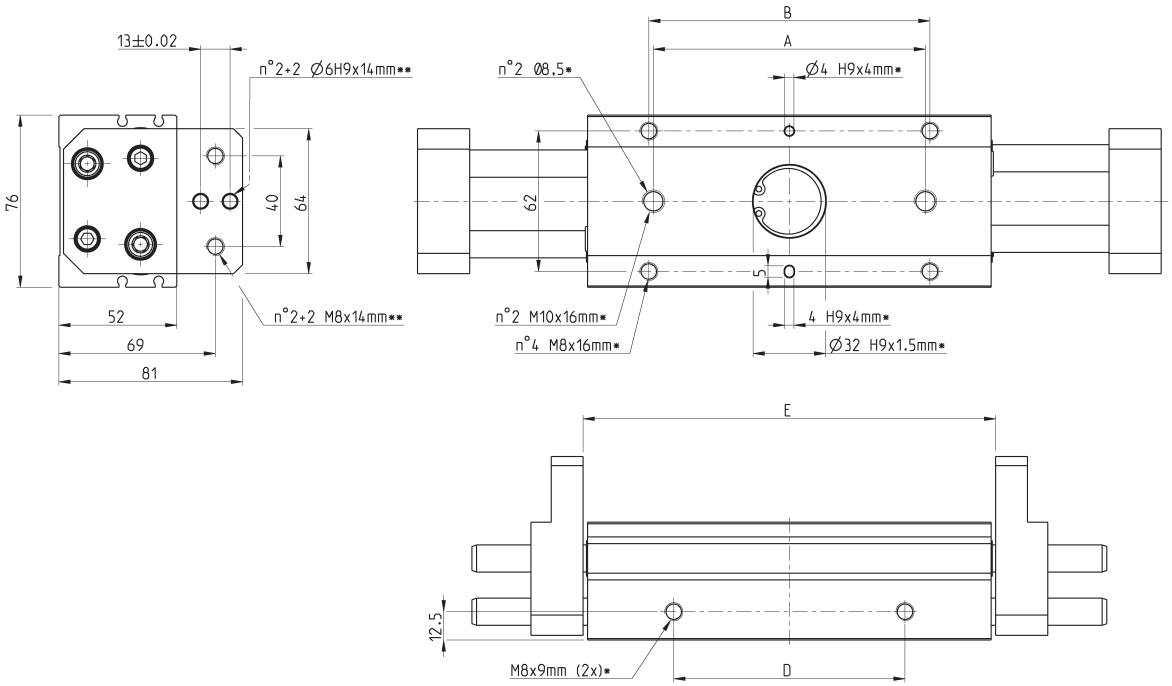

Mod.	Bore	Total stroke	A	B	C	D	E (Closed) Min opening	F (Open) Max opening	G	Max frequency (cycles/min)	Weight (g)
CGLN-25-050	25	50	66	70	97	48	100	150	36	60	1780
CGLN-25-100	25	100	120	124	178	102	182	282	90	40	2710
CGLN-25-120	25	120	138	142	195	120	200	320	108	40	2960

CGLN gripper, bore 32 mm - dimensions

DRAWING LEGEND:

* = depth of the mounting threads
** = thread for the accessory mounting
*** = opening/closing of air connections

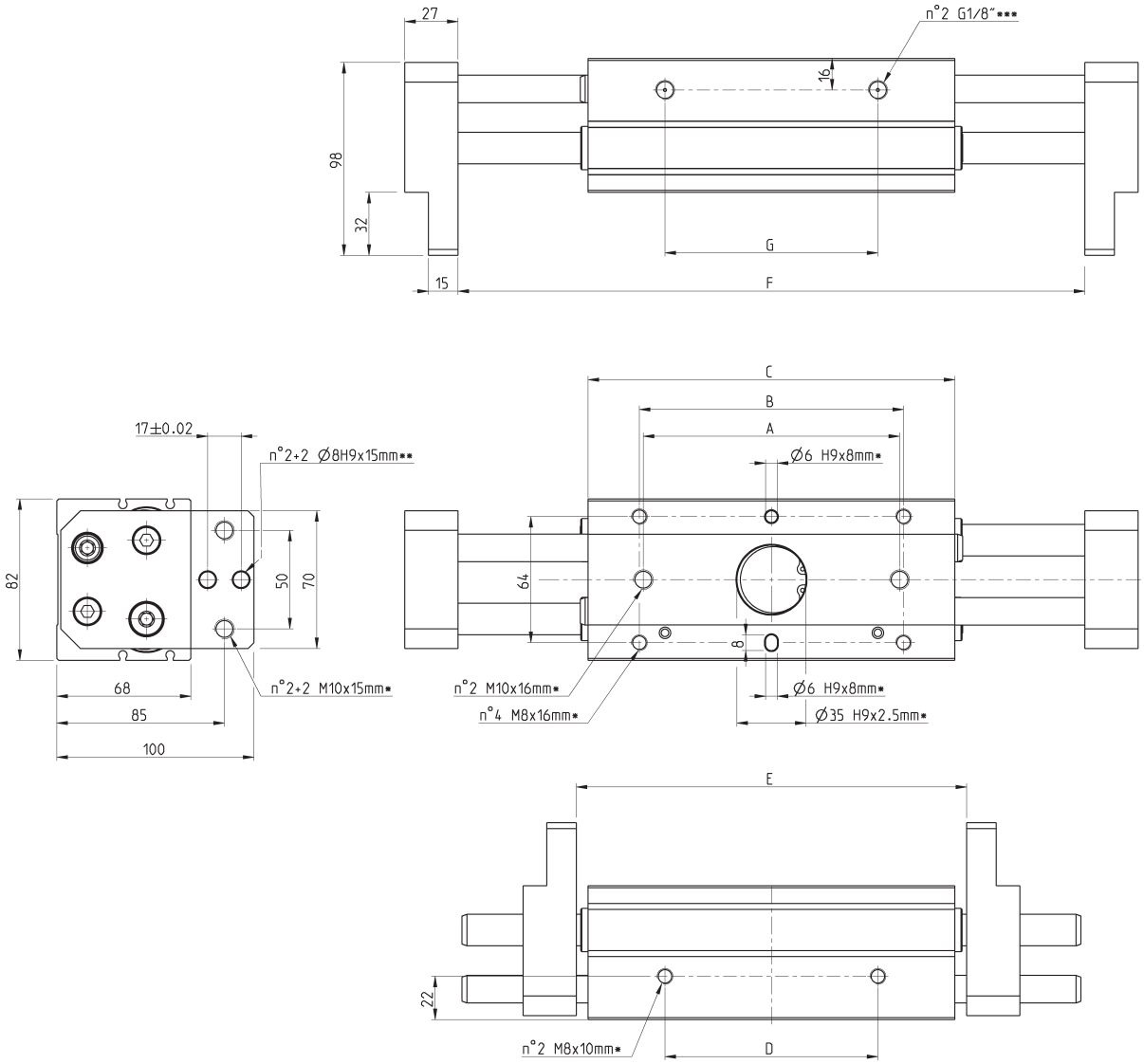

Mod.	Bore	Total stroke	A	B	C	D	E (Closed) Min opening	F (Open) Max opening	G	Max frequency (cycles/min)	Weight (g)
CGLN-32-070	32	70	82	86	138	60	150	220	60	30	3580
CGLN-32-120	32	120	130	134	186	108	198	318	108	20	4470
CGLN-32-160	32	160	174	178	230	152	242	402	152	20	5240

New

Series CGZT three-jaw grippers with T-guide

Single and double acting, magnetic, self-centering
Sizes: 40, 50, 64, 80, 100, 125, 160 mm

- Robust and light
- 3 self-centering jaws
- IP40
- Fixing from the top and from below
- Supply on the side or on the bottom (even without using tubes)
- Double position detection
- Variants available: for use in ATEX zones and for high temperatures
- In compliance with ROHS directive
- High positioning repeatability
- High resistance and reliability to external loads thanks to T-guide
- Free from Copper, PTFE and Silicone

The new Series CGZT pneumatic grippers, thanks to the use of a high performing and precise force transmission system, are able to provide high gripping forces, while guaranteeing high repeatability in a compact and light design.

Available in 7 sizes (40, 50, 64, 80, 100, 125 and 160) and three different versions (double acting, single acting NO and single acting NC), allows you to find the best solution for every handling need. They are also available with a part retaining unit. This gripper series results particularly suitable to be combined with anthropomorphic or collaborative robots and gantry systems for applications in Pick and Place units, Material handling and the loading/unloading operations of machine tools.

GENERAL DATA

Type of construction	Three-jaw self-centering gripper with T-guide
Operation	Single acting (NO, NC) double acting
Sizes	40, 50, 64, 80, 100, 125, 160 mm
Force transmission	Lever
Air connections	M3 (40), M5 (50, 64, 80), G1/8 (100, 125, 160)
Working pressure	2 ÷ 8 bar (double acting), 4 ÷ 8 bar (single acting)
Working temperature	5°C ÷ 60°C (standard) - 5°C ÷ 130°C (high temperature version)
Store temperature	-10°C ÷ 80°C
Maximum use frequency	5 Hz (40, 50, 64); 3 Hz (80); 2 Hz (100, 125); 1 Hz (160)
Repeatability	≤ 0.02 mm
Interchangeability	0.1 mm
Medium	Air in class 7.4.4 according to ISO 8573-1. In case lubricated air is used, we recommend ISOVG32 oil and to never interrupt lubrication.
Lubrication	After 10 million cycles, grease the sliding zones using Molykote DX grease.
Protection class	IP40
Compatibility	ROHS Directive
Certifications	ATEX (II2G Ex h IIC T4 Gb II2D Ex h IIIC T120° Db -20°C≤Ta≤70°C). Add EX at the end of the commercial code to order the ATEX version.
Materials	Free from Copper, PTFE and Silicone

NOTE: Pressurize the pneumatic system gradually in order to avoid uncontrolled movements.

CODING EXAMPLE

CGZT	-	050	-	NC	-	W	EX

CGZT	SERIES	
050	SIZES: 040 = Ø25 050 = Ø33 064 = Ø43 080 = Ø54 100 = Ø76 125 = Ø96 160 = Ø125	
NC	FUNCTIONING: = double acting NO = single acting, normally open NC = single acting, normally closed	PNEUMATIC SYMBOLS PNZ1 PNZ3 PNZ2
W	VERSION: = standard W = high temperatures (130°C) - non magnetic	
EX	Add EX to order the certified ATEX version	

PNEUMATIC SYMBOLS

The pneumatic symbols which have been indicated in the CODING EXAMPLE are shown below.

Maximum admissible loads and torques

Fz s, Mx s, My s, Mz s =
maximum admissible loads and
torques in static conditions

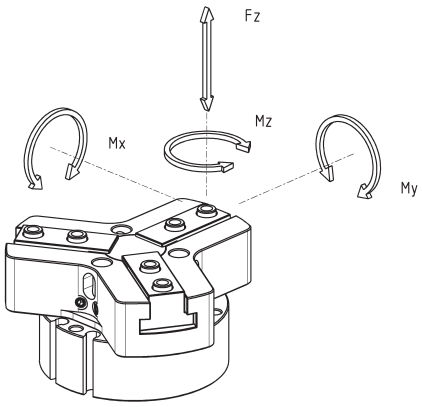

Mod.	Fz s (N)	Mx s (Nm)	My s (Nm)	Mz s (Nm)
CGZT-040	200	2.5	4	2.8
CGZT-050	400	7	7.3	7.7
CGZT-064	600	13	14	14
CGZT-080	1000	26	27	24
CGZT-100	1500	58	65	65
CGZT-125	2500	100	120	120
CGZT-160	4000	230	250	250

Series CGPT gripper - construction

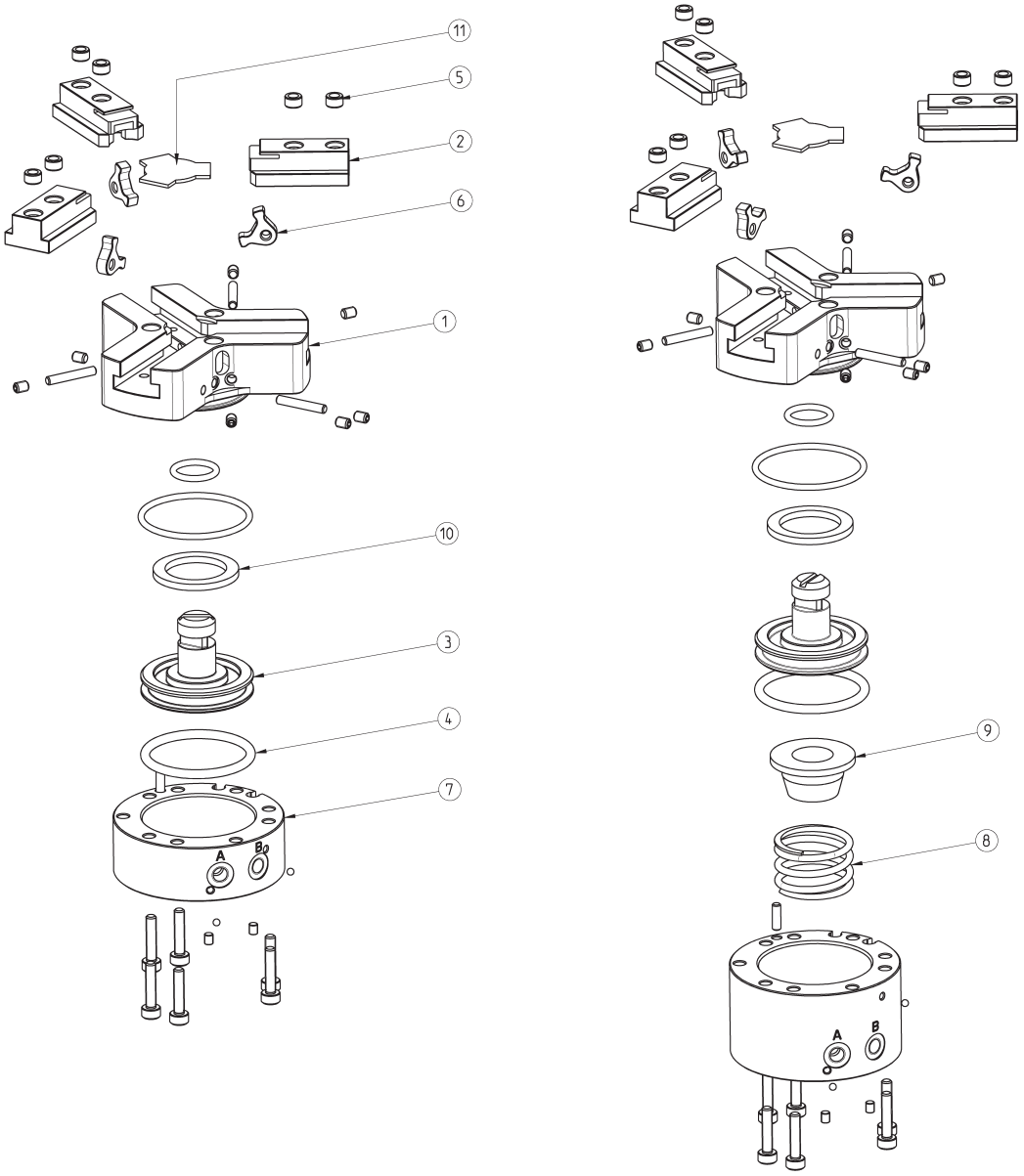

LIST OF COMPONENTS	
PARTS	MATERIALS
1 - Body	Aluminium
2 - Jaw	Stainless steel
3 - Piston	Stainless steel
4 - Seals	HNBR / FKM
5 - Centering bushes	Stainless steel
6 - Levers	Steel
7 - End cover	Aluminium
8 - Spring	Steel
9 - Spring guide	Aluminium
10 - Magnet	Neodymium
11 - Cover	Stainless steel

CGZT gripper, size 40mm - dimensions

DRAWING LEGEND:
A = Opening of air connection
B = Closing of air connection
C = Closed gripper
D = Open gripper

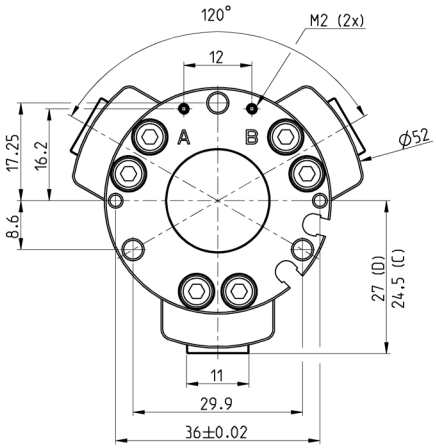

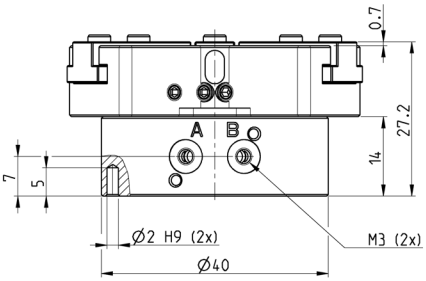

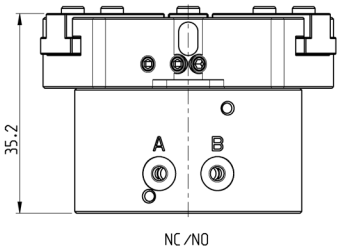

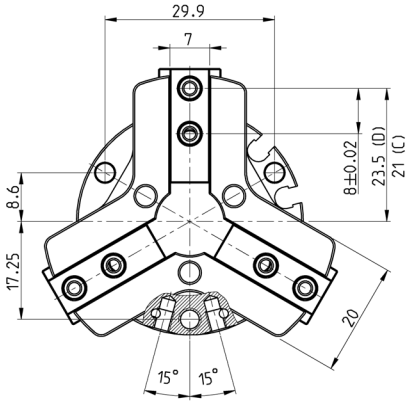

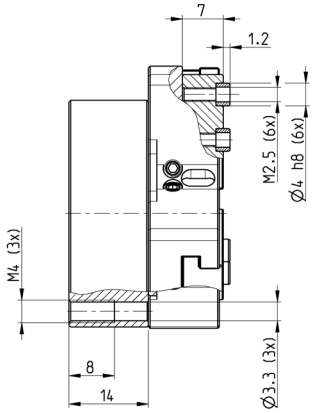

Mod.	Closing gripping force each jaw at 6 bar (N)	Total closing gripping force at 6 bar (N)	Opening gripping force each jaw at 6 bar (N)	Total opening gripping force at 6 bar (N)	Stroke per jaw (mm)	Working pressure (bar)	Working temperature (°C)	Repeatability (mm)	Opening T (ms)	Closing T (ms)	Weight (Kg)
CGZT-040	60	181	67	202	2.5	2 ÷ 8	5 ÷ 60	≤ 0.02	57	63	0.114
CGZT-040-NC	93	80	33	100	2.5	4 ÷ 8	5 ÷ 60	≤ 0.02	56	106	0.132
CGZT-040-NO	27	280	100	300	2.5	4 ÷ 8	5 ÷ 60	≤ 0.02	79	49	0.130

CGZT gripper, size 50mm - dimensions

DRAWING LEGEND:
A = Opening of air connection
B = Closing of air connection
C = Closed gripper
D = Open gripper

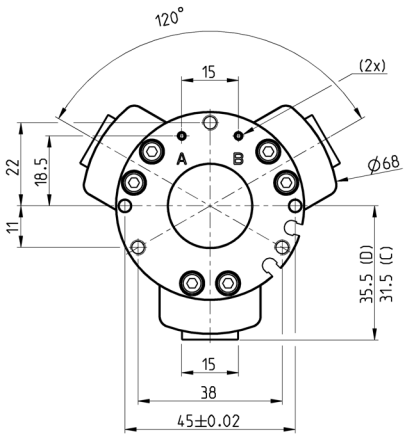

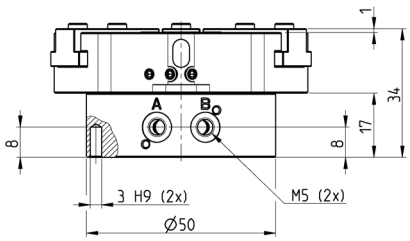

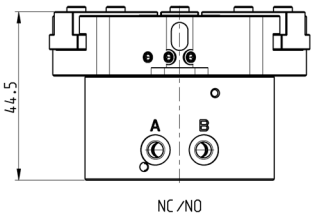

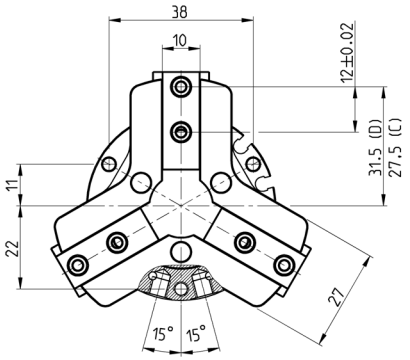

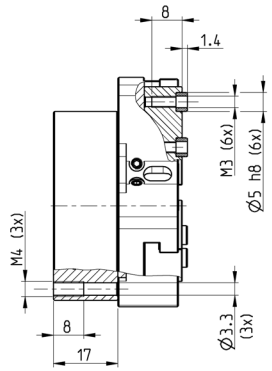

Mod.	Closing gripping force each jaw at 6 bar (N)	Total closing gripping force at 6 bar (N)	Opening gripping force each jaw at 6 bar (N)	Total opening gripping force at 6 bar (N)	Stroke per jaw (mm)	Working pressure (bar)	Working temperature (°C)	Repeatability (mm)	Opening T (ms)	Closing T (ms)	Weight (Kg)
CGZT-050	115	346	130	390	4	2 ÷ 8	5 ÷ 60	≤ 0.02	75	85	0.240
CGZT-050-NC	160	480	83	250	4	4 ÷ 8	5 ÷ 60	≤ 0.02	56	151	0.280
CGZT-050-NO	70	210	173	520	4	4 ÷ 8	5 ÷ 60	≤ 0.02	137	55	0.275

CGZT gripper, size 64mm - dimensions

DRAWING LEGEND:
A = Opening of air connection
B = Closing of air connection
C = Closed gripper
D = Open gripper

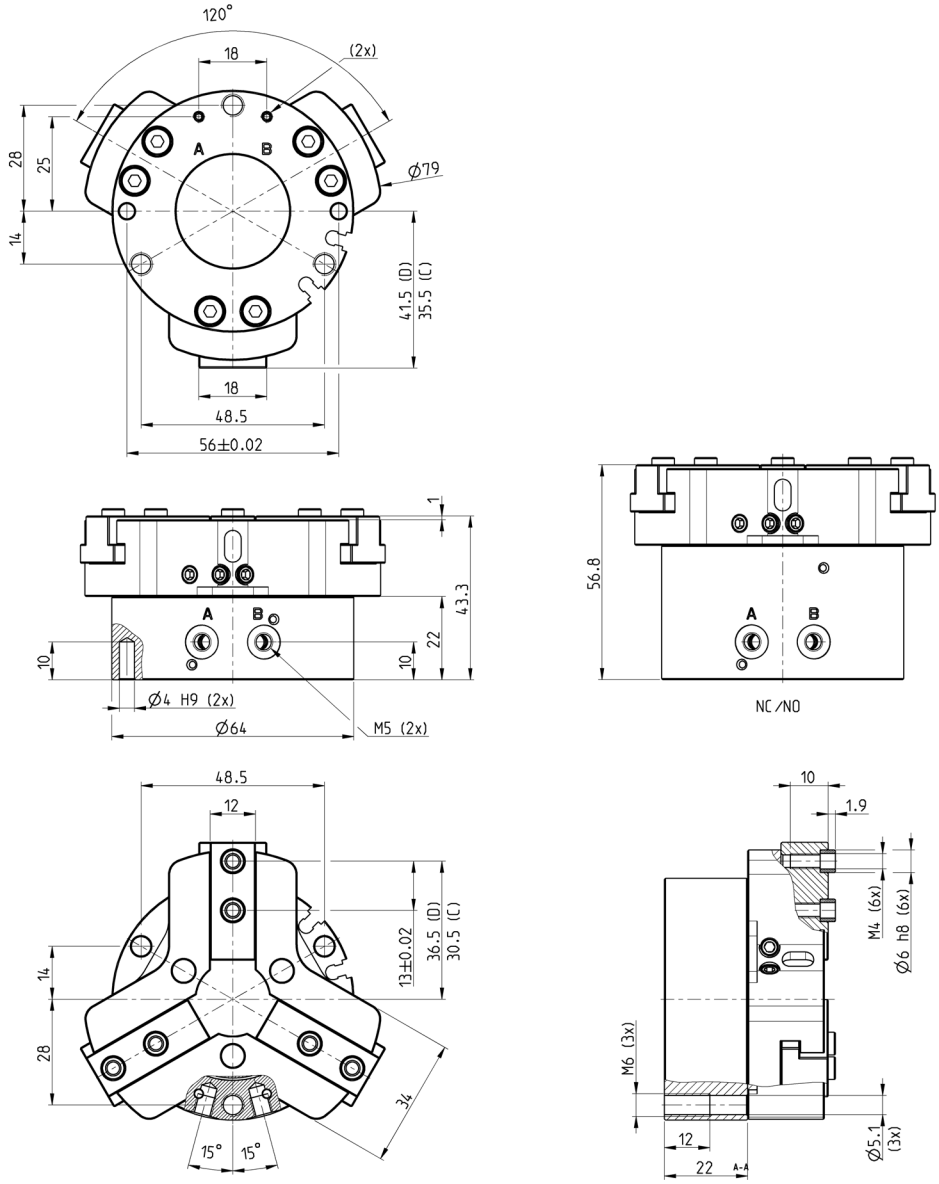

Mod.	Closing gripping force each jaw at 6 bar (N)	Total closing gripping force at 6 bar (N)	Opening gripping force each jaw at 6 bar (N)	Total opening gripping force at 6 bar (N)	Stroke per jaw (mm)	Working pressure (bar)	Working temperature (°C)	Repeatability (mm)	Opening T (ms)	Closing T (ms)	Weight (Kg)
CGZT-064	223	670	242	726	6	2 ÷ 8	5 ÷ 60	≤ 0.02	85	104	0.461
CGZT-064-NC	320	960	147	440	6	4 ÷ 8	5 ÷ 60	≤ 0.02	88	158	0.560
CGZT-064-NO	127	380	323	970	6	4 ÷ 8	5 ÷ 60	≤ 0.02	153	71	0.537

CGZT gripper, size 80mm - dimensions

DRAWING LEGEND:
A = Opening of air connection
B = Closing of air connection
C = Closed gripper
D = Open gripper

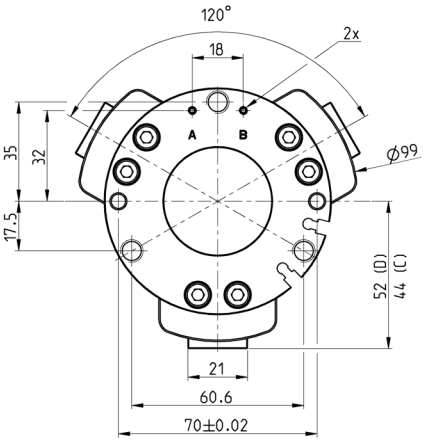

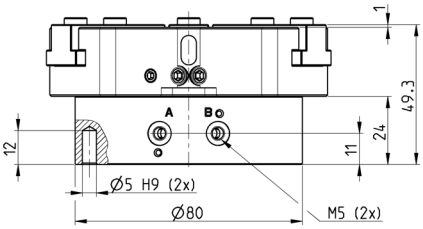

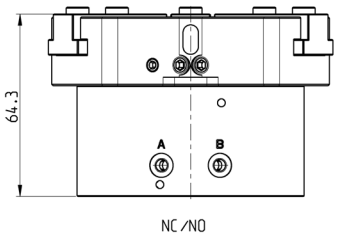

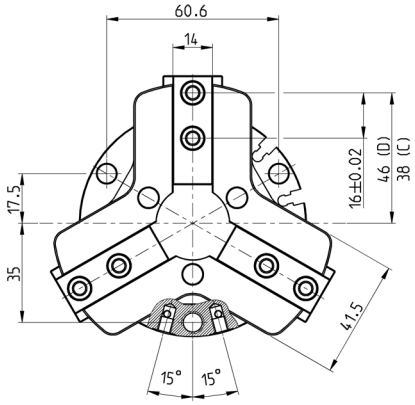

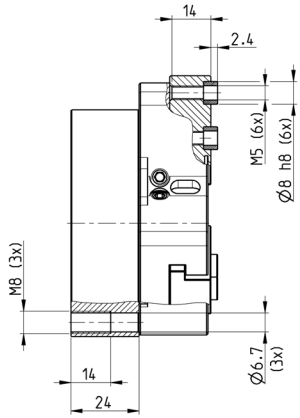

Mod.	Closing gripping force each jaw at 6 bar (N)	Total closing gripping force at 6 bar (N)	Opening gripping force each jaw at 6 bar (N)	Total opening gripping force at 6 bar (N)	Stroke per jaw (mm)	Working pressure (bar)	Working temperature (°C)	Repeatability (mm)	Opening T (ms)	Closing T (ms)	Weight (Kg)
CGZT-080	327	980	359	1078	8	2 ÷ 8	5 ÷ 60	≤ 0.02	116	133	0.796
CGZT-080-NC	437	1310	247	740	8	4 ÷ 8	5 ÷ 60	≤ 0.02	88	258	0.987
CGZT-080-NO	213	640	450	1350	8	4 ÷ 8	5 ÷ 60	≤ 0.02	195	73	0.934

CGZT gripper, size 100mm - dimensions

DRAWING LEGEND:
A = Opening of air connection
B = Closing of air connection
C = Closed gripper
D = Open gripper

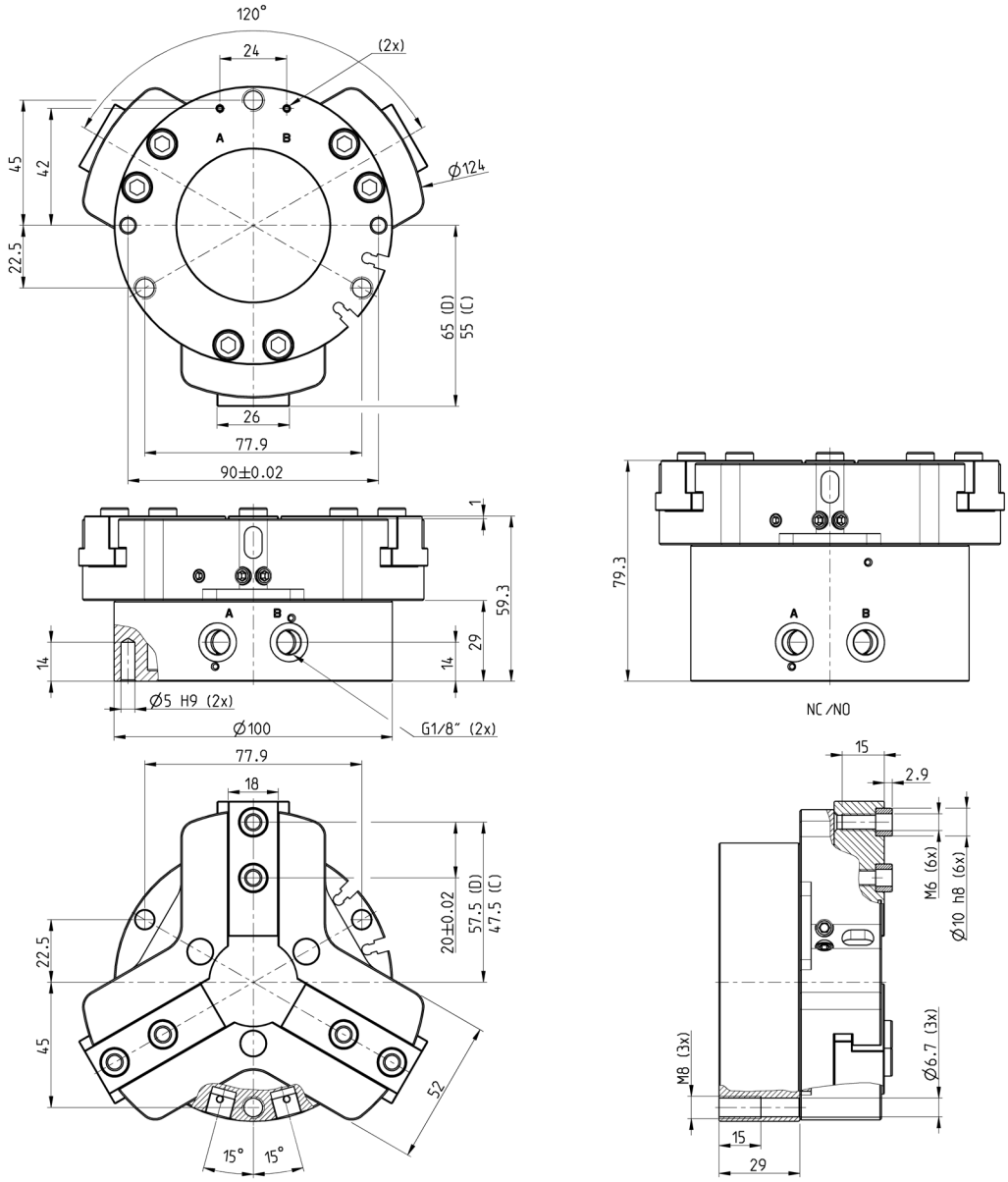

Mod.	Closing gripping force each jaw at 6 bar (N)	Total closing gripping force at 6 bar (N)	Opening gripping force each jaw at 6 bar (N)	Total opening gripping force at 6 bar (N)	Stroke per jaw (mm)	Working pressure (bar)	Working temperature (°C)	Repeatability (mm)	Opening T (ms)	Closing T (ms)	Weight (Kg)
CGZT-100	677	2030	722	2165	10	2 ÷ 8	5 ÷ 60	≤ 0.02	135	155	1.483
CGZT-100-NC	873	2620	523	1570	10	4 ÷ 8	5 ÷ 60	≤ 0.02	74	254	1.790
CGZT-100-NO	480	1440	917	2750	10	4 ÷ 8	5 ÷ 60	≤ 0.02	282	75	1.755

CGZT gripper, size 125mm - dimensions

DRAWING LEGEND:
A = Opening of air connection
B = Closing of air connection
C = Closed gripper
D = Open gripper

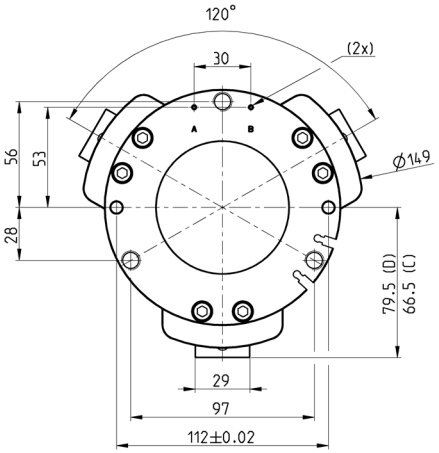

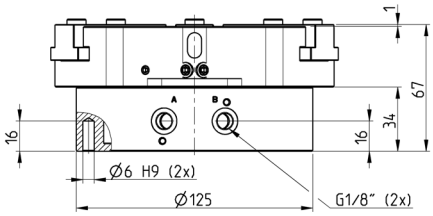

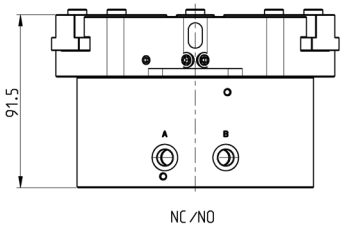

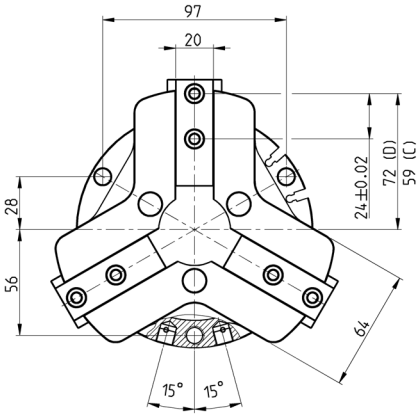

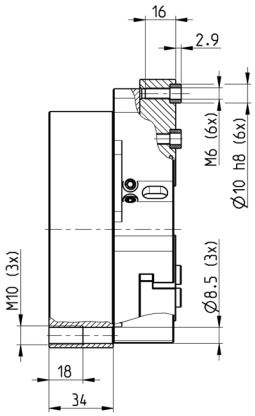

Mod.	Closing gripping force each jaw at 6 bar (N)	Total closing gripping force at 6 bar (N)	Opening gripping force each jaw at 6 bar (N)	Total opening gripping force at 6 bar (N)	Stroke per jaw (mm)	Working pressure (bar)	Working temperature (°C)	Repeatability (mm)	Opening T (ms)	Closing T (ms)	Weight (Kg)
CGZT-125	1123	3370	1198	3594	13	2 ÷ 8	5 ÷ 60	≤ 0.02	198	227	2.220
CGZT-125-NC	1400	4200	920	2760	13	4 ÷ 8	5 ÷ 60	≤ 0.02	108	349	3.005
CGZT-125-NO	843	2530	1477	4430	13	4 ÷ 8	5 ÷ 60	≤ 0.02	329	119	2.752

CGZT gripper, size 160mm - dimensions

DRAWING LEGEND:
A = Opening of air connection
B = Closing of air connection
C = Closed gripper
D = Open gripper

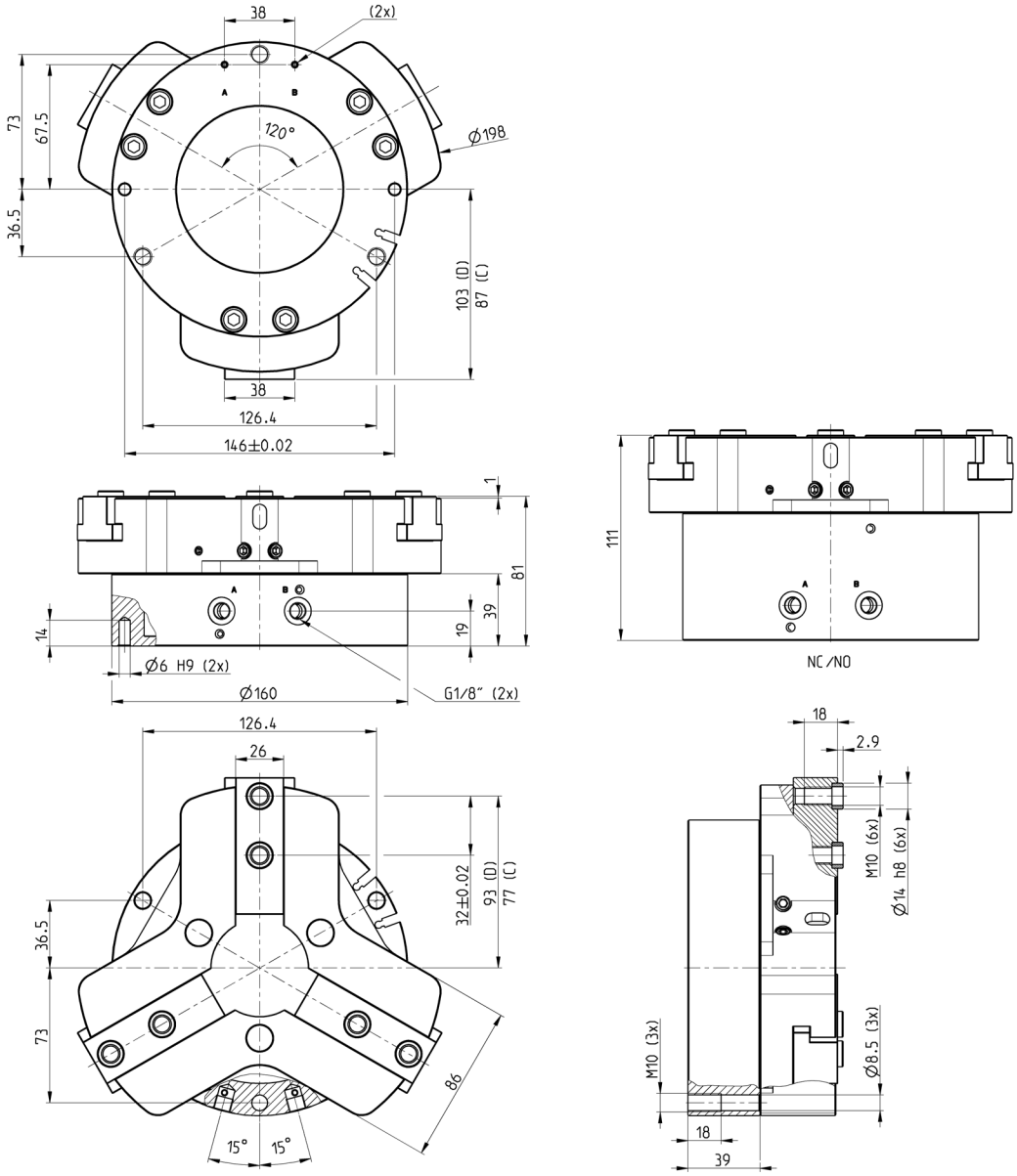

Mod.	Closing gripping force each jaw at 6 bar (N)	Total closing gripping force at 6 bar (N)	Opening gripping force each jaw at 6 bar (N)	Total opening gripping force at 6 bar (N)	Stroke per jaw (mm)	Working pressure (bar)	Working temperature (°C)	Repeatability (mm)	Opening T (ms)	Closing T (ms)	Weight (Kg)
CGZT-160	1927	5780	1767	5300	16	2 ÷ 8	5 ÷ 60	≤ 0.02	239	304	4.714
CGZT-160-NC	2150	6450	1540	4620	16	4 ÷ 8	5 ÷ 60	≤ 0.02	150	791	6.504
CGZT-160-NO	1380	4140	2310	6930	16	4 ÷ 8	5 ÷ 60	≤ 0.02	418	129	5.851

GRIPPING FORCE PER SINGLE JAW

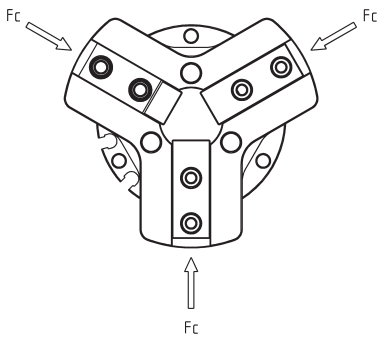

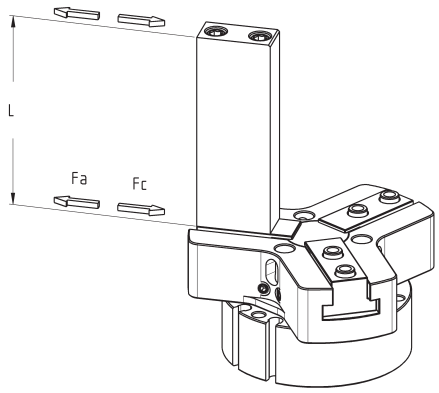

The total gripping force has to be calculated as follows:
Total Fc = Fc x 3
Total Fa = Fa x 3

Fc = closing gripping force
Fa = opening gripping force
L = gripping point length

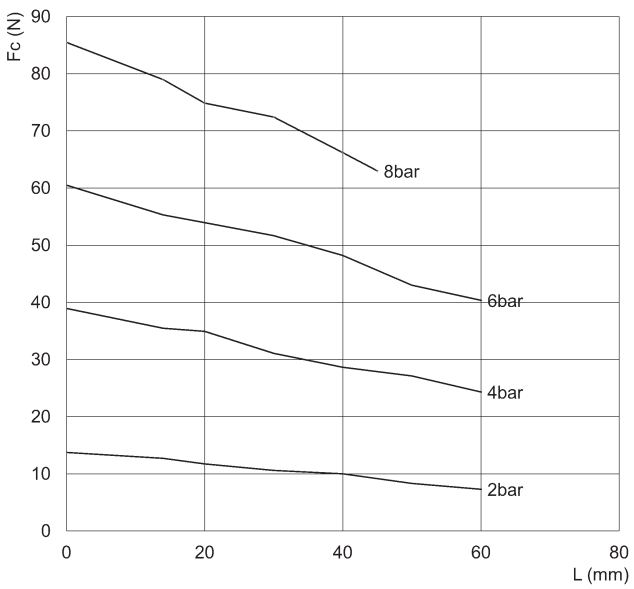

CGZT-040

Fc = closing gripping force
L = gripping point length

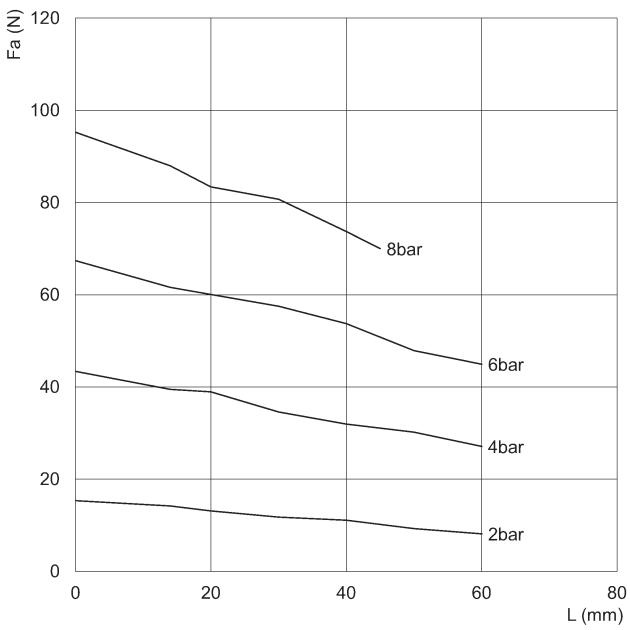

CGZT-040

Fa = opening gripping force
L = gripping point length

GRIPPING FORCE PER SINGLE JAW

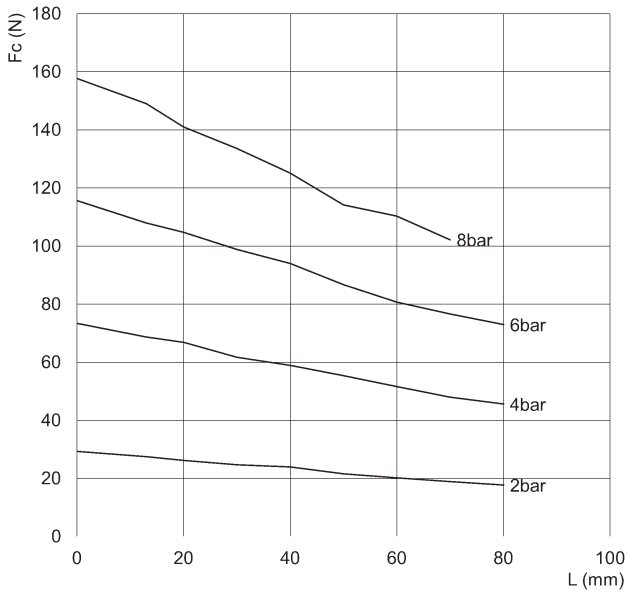

CGZT-050

Fc = closing gripping force
L = gripping point length

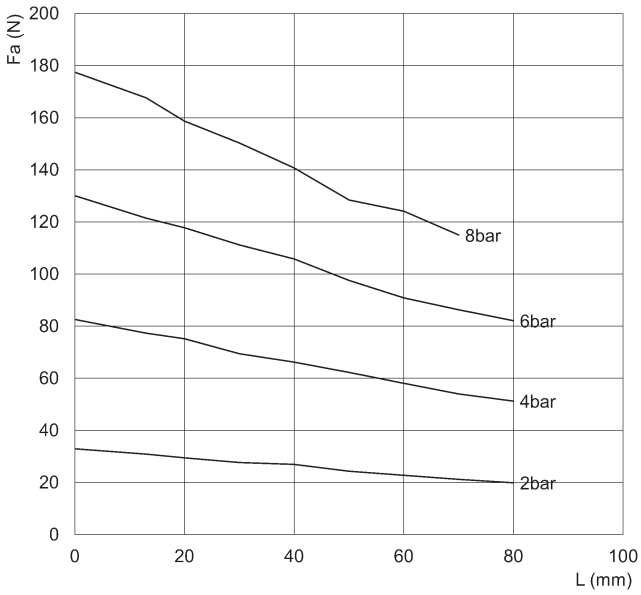

CGZT-050

Fa = opening gripping force
L = gripping point length

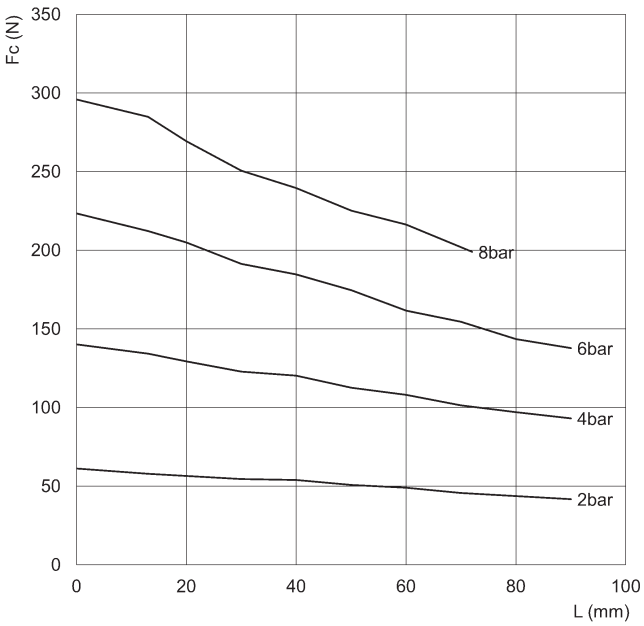

CGZT-064

Fc = closing gripping force
L = gripping point length

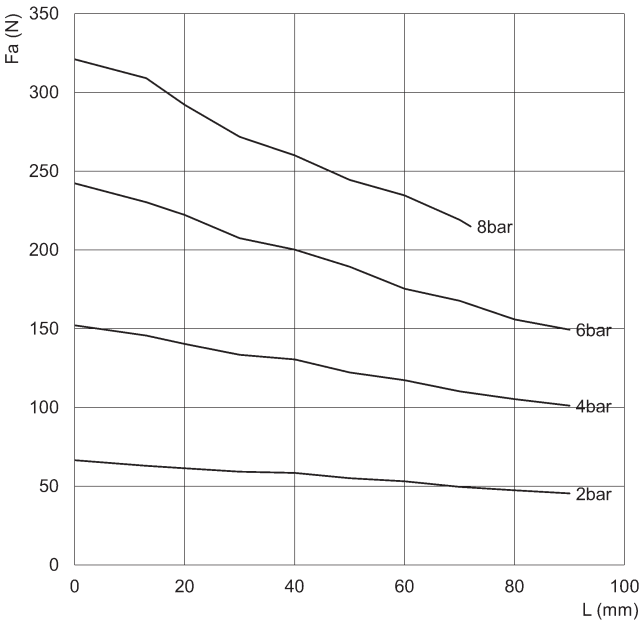

CGZT-064

Fa = opening gripping force
L = gripping point length

GRIPPING FORCE PER SINGLE JAW

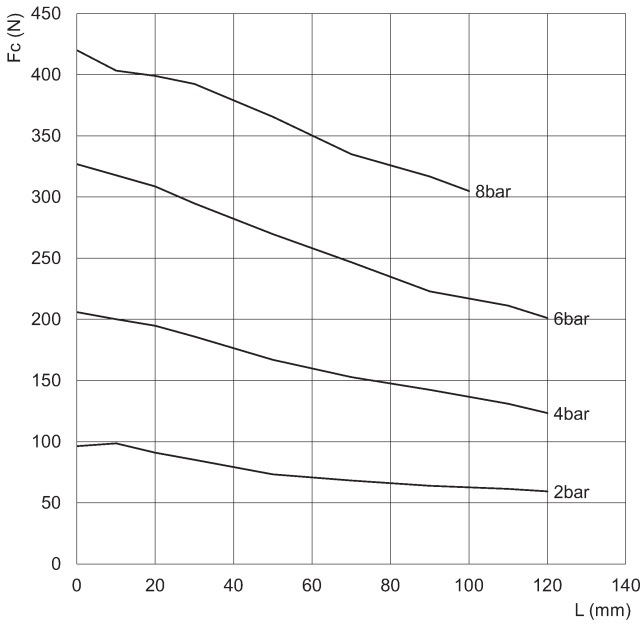

CGZT-080

Fc = closing gripping force
L = gripping point length

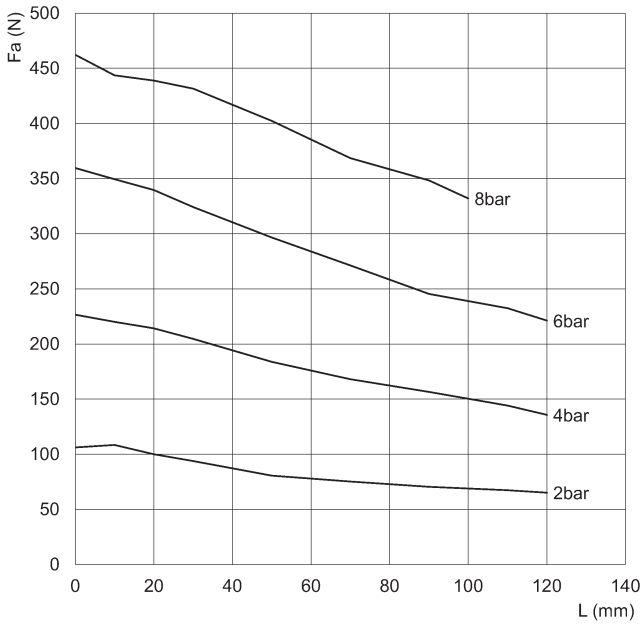

CGZT-080

Fa = opening gripping force
L = gripping point length

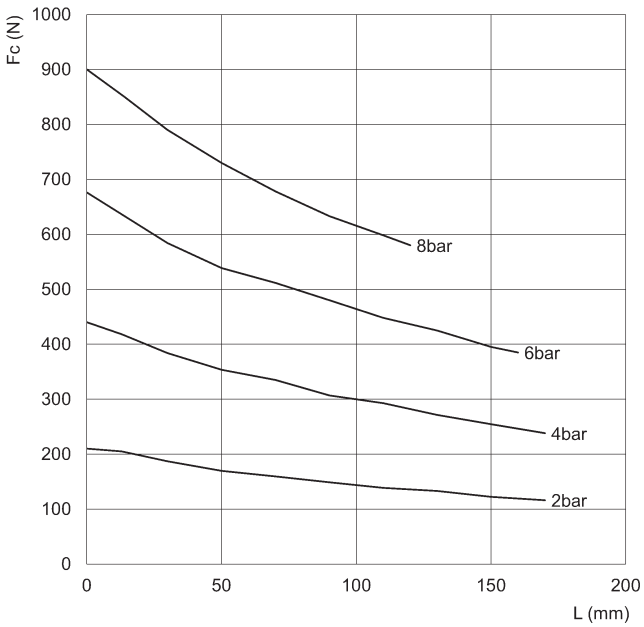

CGZT-100

Fc = closing gripping force
L = gripping point length

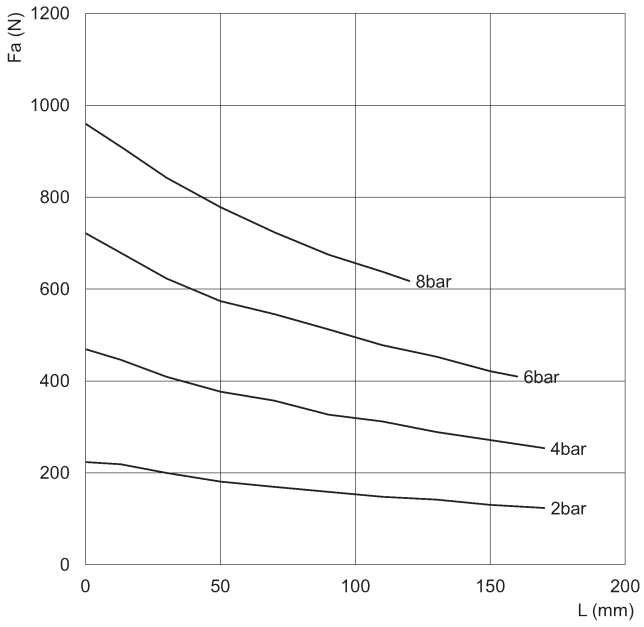

CGZT-100

Fa = opening gripping force
L = gripping point length

GRIPPING FORCE PER SINGLE JAW

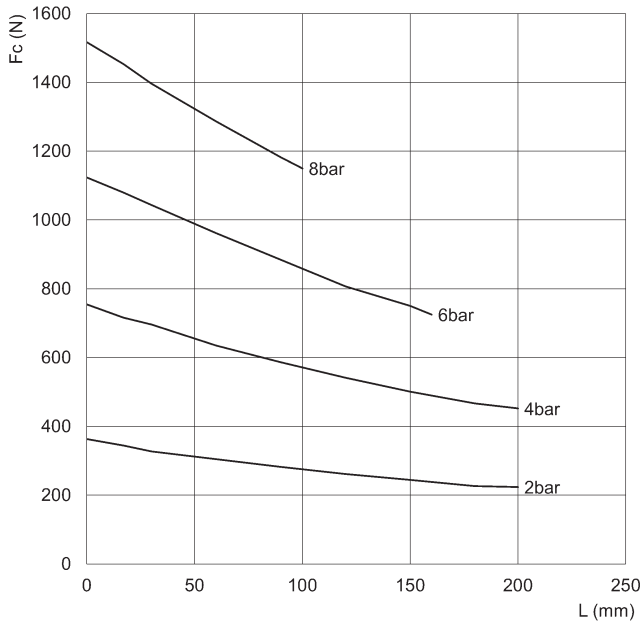

CGZT-125

Fc = closing gripping force
L = gripping point length

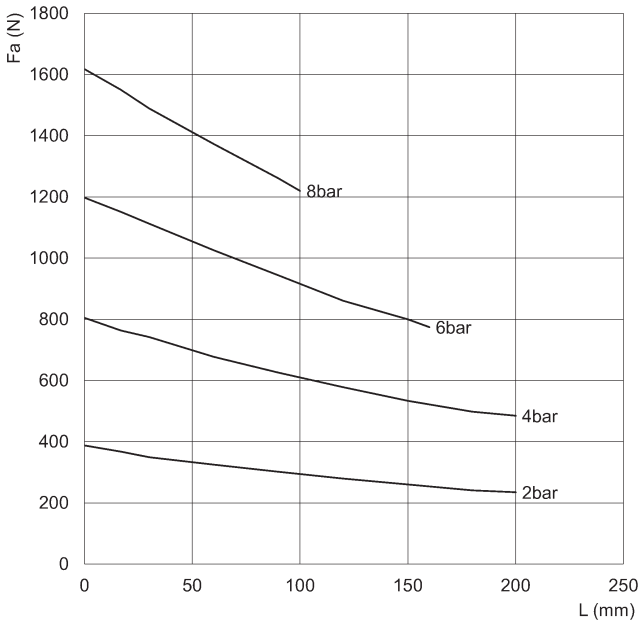

CGZT-125

Fa = opening gripping force
L = gripping point length

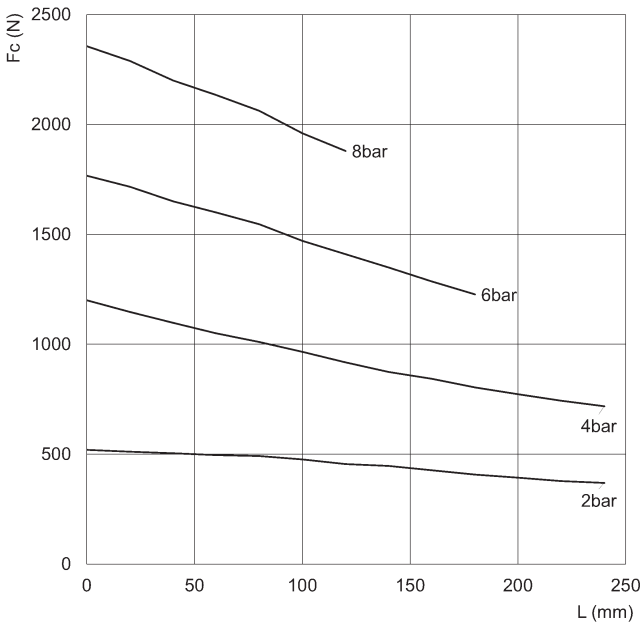

CGZT-160

Fc = closing gripping force
L = gripping point length

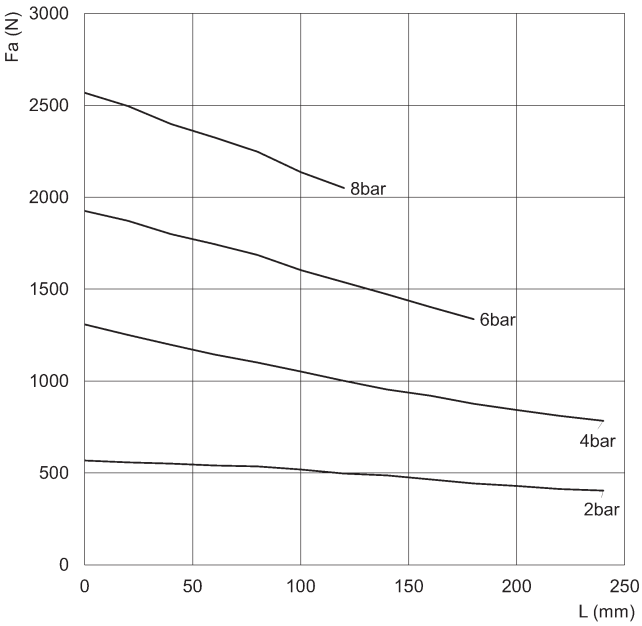

CGZT-160

Fa = opening gripping force
L = gripping point length

Examples of mounting

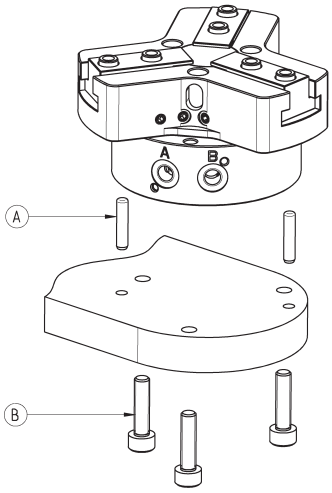

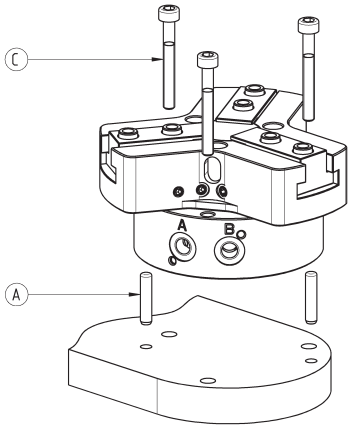

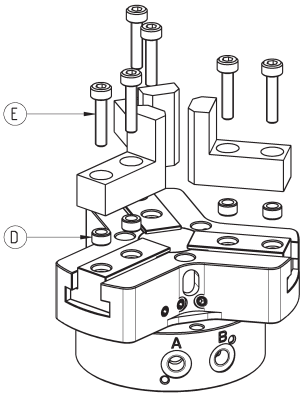

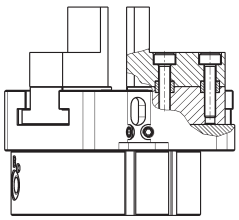

Mod.	A	B	C	D	E
CGZT-040	Ø2	M4	M3	Ø4	M2.5
CGZT-050	Ø3	M4	M3	Ø5	M3
CGZT-064	Ø4	M6	M5	Ø6	M4
CGZT-080	Ø5	M8	M6	Ø8	M5
CGZT-100	Ø5	M8	M6	Ø10	M6
CGZT-125	Ø6	M10	M8	Ø10	M6
CGZT-160	Ø6	M10	M8	Ø14	M10

Air supply ports

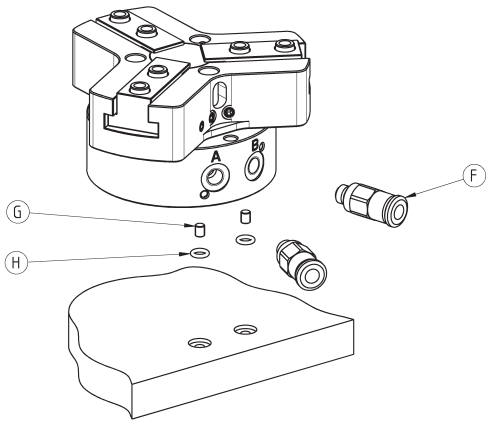

Mod.	F	G	H
CGZT-040	M3	M2	OR 1x2.5
CGZT-050	M5	M2.5	OR 1x3
CGZT-064	M5	M3	OR 1x3.5
CGZT-080	M5	M3	OR 1x3.5
CGZT-100	G1/8	M3	OR 1x3.5
CGZT-125	G1/8	M3	OR 1x3.5
CGZT-160	G1/8	M4	OR 1x4.5

Example of use of the pressurization/lubrication hole

Example of use of the lubrication (greasing) or pressurization hole of the zone with moving items

NOTE 1: grease the sliding zones using Molykote DX grease.
NOTE 2: supply a pressure of max 1 bar in order to avoid the sudden ejection of grease.

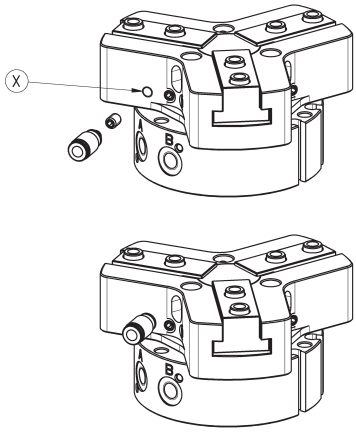

Mod.	X
CGZT-040	M3
CGZT-050	M3
CGZT-064	M5
CGZT-080	M5
CGZT-100	M5
CGZT-125	M5
CGZT-160	M5

Example of mounting: sensors

L = sensor Series CSD

In order to position the sensor correctly, a channel must be created in the base.

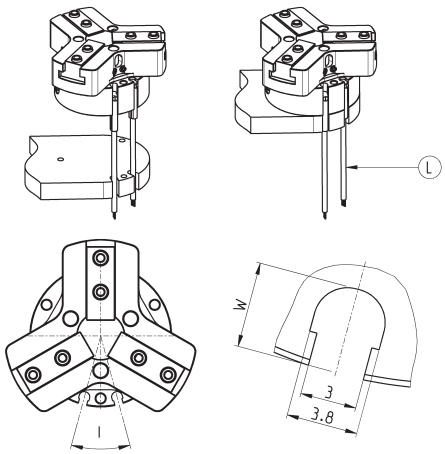

Mod.	I	W
CGZT-040	32°	4.5
CGZT-050	30°	4.6
CGZT-064	30°	6.5
CGZT-080	32°	8.7
CGZT-100	28°	9.3
CGZT-125	24°	11.5
CGZT-160	20°	12.5

Part retaining unit

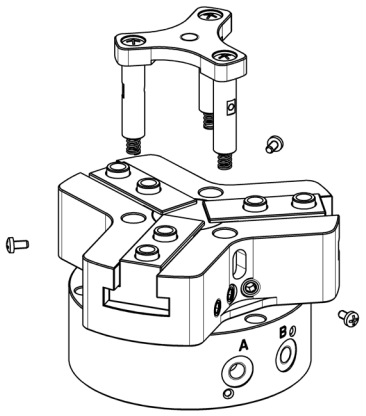

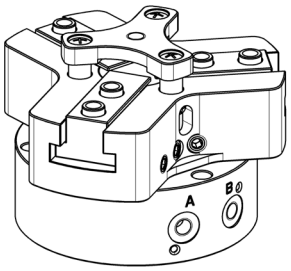

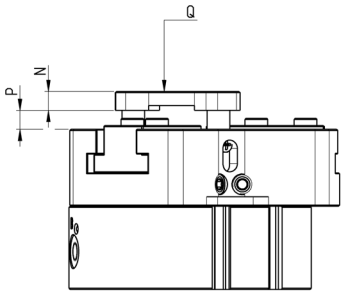

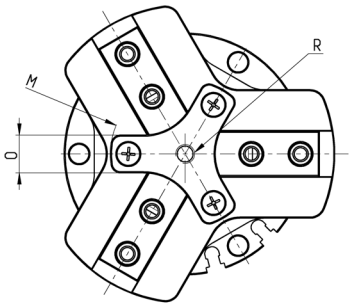

Mod.	M	N	O	P	Q	R
P-CGZT-040	Ø24	3.5	6	0 ÷ 2.5	10 N	M3
P-CGZT-050	Ø32.5	4.5	8	0 ÷ 3	14 N	M4
P-CGZT-064	Ø39.5	5	10	0 ÷ 5	21 N	M5
P-CGZT-080	Ø49	6	12.5	0 ÷ 5	32 N	M6
P-CGZT-100	Ø59	7	14	0 ÷ 5	48 N	M8
P-CGZT-125	Ø73	8	18	0 ÷ 6	85 N	M10
P-CGZT-160	Ø99	9.5	25	0 ÷ 6	185 N	M10

Series CGCN self-centering three-jaw grippers with T-guide

New

Double acting, magnetic
Sizes: 50, 64, 80, 100, 125 mm

- Compact design
- 3 self-centering jaws
- IP40
- Supply on the side
- Long stroke
- In compliance with ROHS directive
- Free from Copper, PTFE and Silicone

Thanks to the permanent magnet integrated into the gripper piston, the Series CSD magnetic proximity switches can be inserted in the grooves on the body.

The new Series CGCN pneumatic grippers are available in 5 different sizes (50, 64, 80, 100, 125).
Their compact design allows high clamping force and long strokes in reduced dimensions.

GENERAL DATA

Type of construction	three-jaw self-centering gripper with T-guide
Operation	double acting
Sizes	50, 64, 80, 100, 125 mm
Force transmission	lever
Air connections	M5 (50, 64, 80) G1/8 (100, 125)
Working pressure	2 ÷ 8 bar
Working temperature	5°C ÷ 60°C
Store temperature	-10°C ÷ 80°C
Maximum use frequency	5 Hz (50, 64); 3 Hz (80); 2 Hz (100, 125)
Repeatability	≤ 0.05 mm
Interchangeability	0.1 mm
Medium	air in class 7.4.4 according to ISO 8573-1. In case lubricated air is used, we recommend ISOVG32 oil and to never interrupt lubrication.
Lubrication	After 10 million cycles, grease the sliding zones using Molykote DX grease.
Protection class	IP40
Compatibility	ROHS Directive
Certifications	ATEX (II2G Ex h IIC T4 Gb II2D Ex h IIIC T120° Db -20°C≤Ta≤70°C). To order the ATEX version add EX at the end of the commercial code.
Materials	free from Copper, PTFE and Silicone
Suitable magnetic proximity switches	Series CSD

NOTE: Pressurize the pneumatic system gradually in order to avoid uncontrolled movements.

CODING EXAMPLE

CGCN	-	050	-	EX

CGCN	SERIES	
050	SIZES: 050 = Ø32 064 = Ø45 080 = Ø54 100 = Ø76 125 = Ø96	PNEUMATIC SYMBOLS PNZ1
EX	VERSIONS: = standard EX = ATEX certified	

Maximum admissible loads and torques

Fz s, Mx s, My s, Mz s =
maximum admissible loads and
torques in static conditions

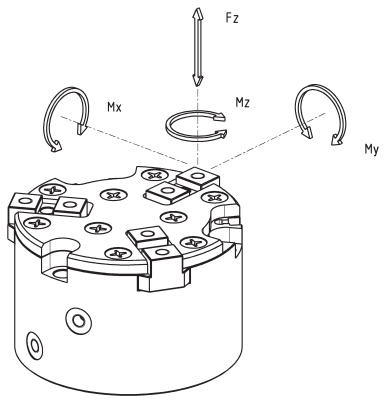

Mod.	Fz s (N)	Mx s (Nm)	My s (Nm)	Mz s (Nm)
CGCN-050	360	6.3	6.93	6.57
CGCN-064	540	11.7	12.6	12.6
CGCN-080	900	23.4	24.3	21.6
CGCN-100	1350	52.2	58.5	58.5
CGCN-125	2250	90	108	108

Series CGCN gripper construction

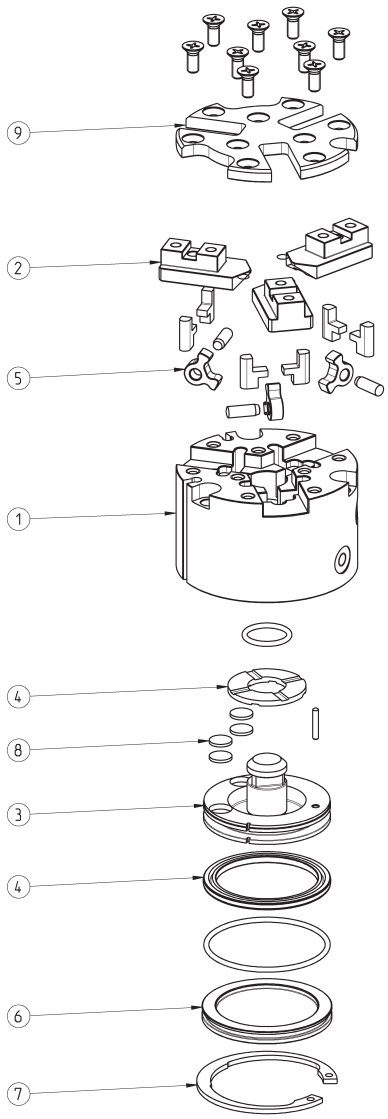

LIST OF COMPONENTS	
PARTS	MATERIALS
1 - Body	Aluminium
2 - Jaw	Stainless steel
3 - Piston	Stainless steel
4 - Seals	HNBR / NBR
5 - Levers	Steel
6 - End cover	Aluminium
7 - Seeger	Steel
8 - Magnet	Neodymium
9 - Cover	Aluminium

Serie CGCN grippers, size 50mm

DRAWING LEGEND:
A = Opening of air connection
B = Closing of air connection
C = Closed gripper
D = Open gripper

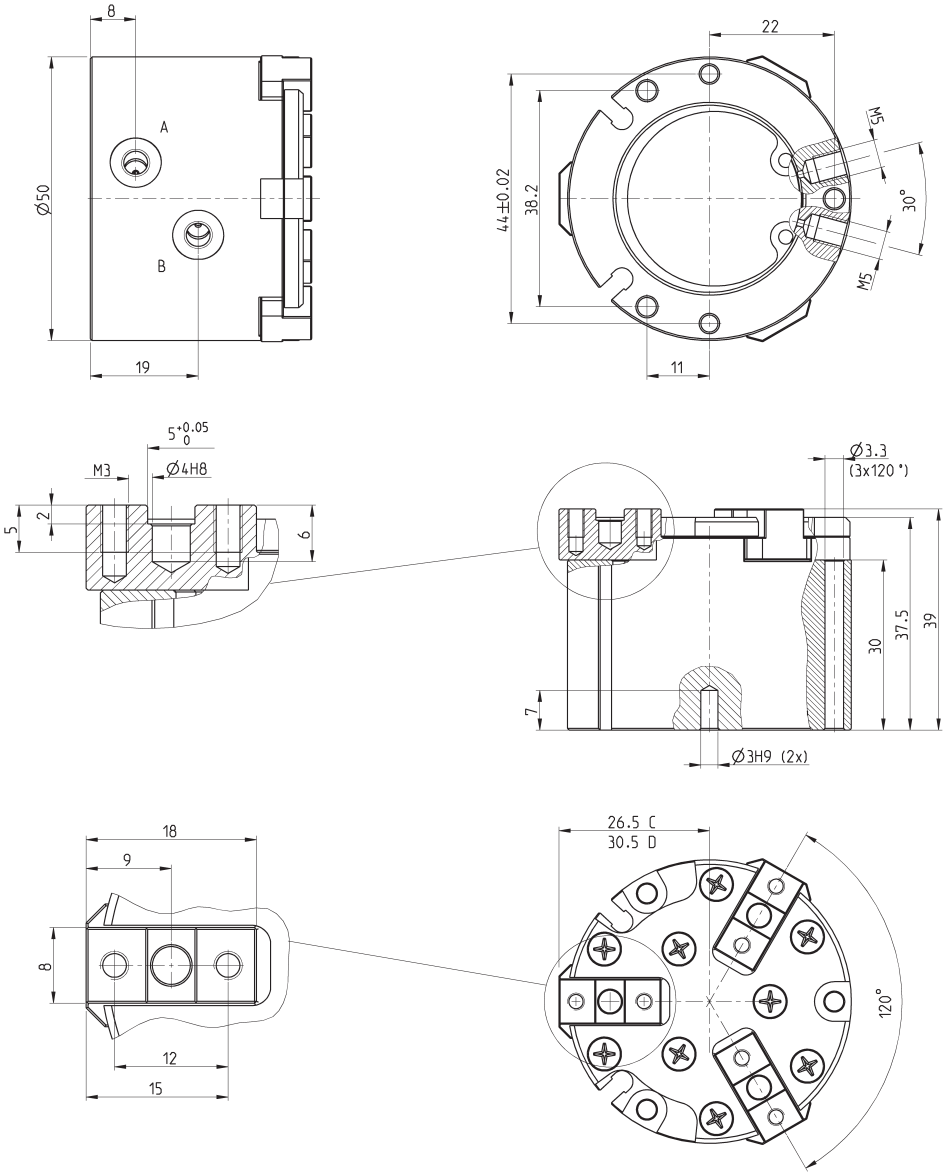

Mod.	Closing gripping force each jaw at 6 bar (N)	Total closing gripping force at 6 bar (N)	Opening gripping force each jaw at 6 bar (N)	Total opening gripping force at 6 bar (N)	Stroke per jaw (mm)	Working pressure (bar)	Working temperature (°C)	Repeatability (mm)	Opening T (ms)	Closing T (ms)	Weight (Kg)
CGCN-050	84	253	95	286	4	2 ÷ 8	5 ÷ 60	≤ 0.05	60	64	0.21

Serie CGCN grippers, size 64mm

DRAWING LEGEND:
A = Opening of air connection
B = Closing of air connection
C = Closed gripper
D = Open gripper

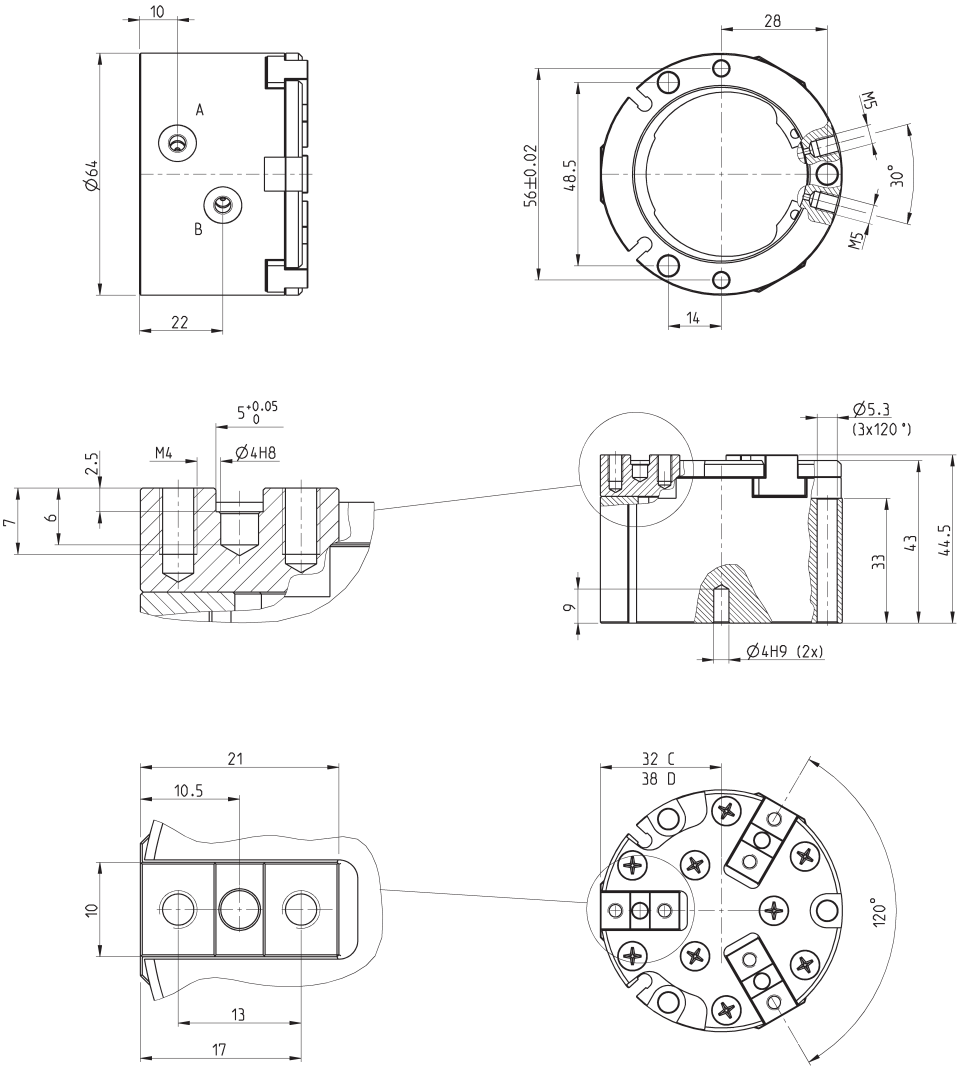

Mod.	Closing gripping force each jaw at 6 bar (N)	Total closing gripping force at 6 bar (N)	Opening gripping force each jaw at 6 bar (N)	Total opening gripping force at 6 bar (N)	Stroke per jaw (mm)	Working pressure (bar)	Working temperature (°C)	Repeatability (mm)	Opening T (ms)	Closing T (ms)	Weight (Kg)
CGCN-064	230	690	255	764	6	2 ÷ 8	5 ÷ 60	≤ 0.05	79	78	0.4

Serie CGCN grippers, size 80mm

DRAWING LEGEND:
A = Opening of air connection
B = Closing of air connection
C = Closed gripper
D = Open gripper

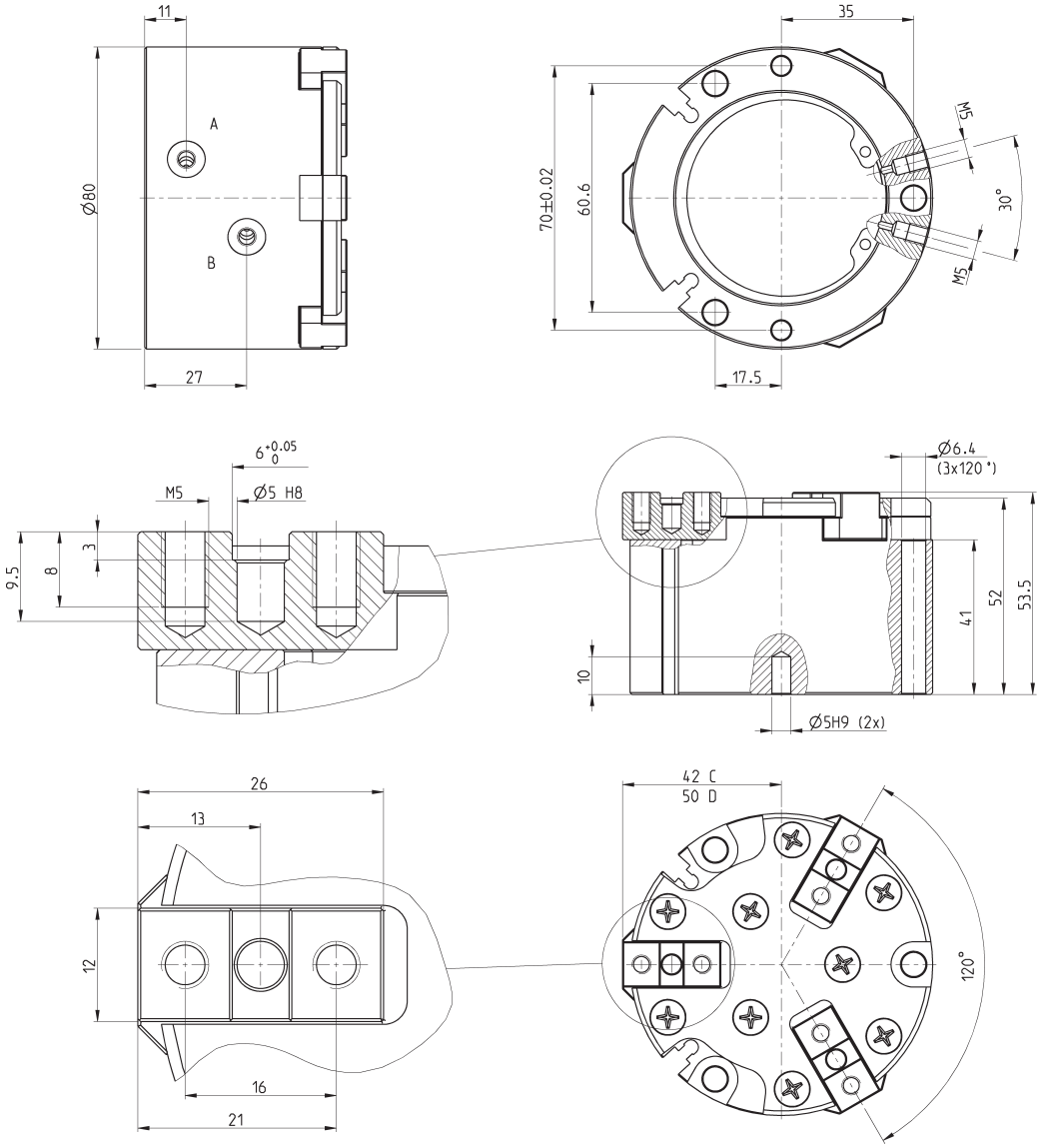

Mod.	Closing gripping force each jaw at 6 bar (N)	Total closing gripping force at 6 bar (N)	Opening gripping force each jaw at 6 bar (N)	Total opening gripping force at 6 bar (N)	Stroke per jaw (mm)	Working pressure (bar)	Working temperature (°C)	Repeatability (mm)	Opening T (ms)	Closing T (ms)	Weight (Kg)
CGCN-080	320	960	365	1095	8	2 ÷ 8	5 ÷ 60	≤ 0.05	87	99	0.76

Serie CGCN grippers, size 100mm

DRAWING LEGEND:
A = Opening of air connection
B = Closing of air connection
C = Closed gripper
D = Open gripper

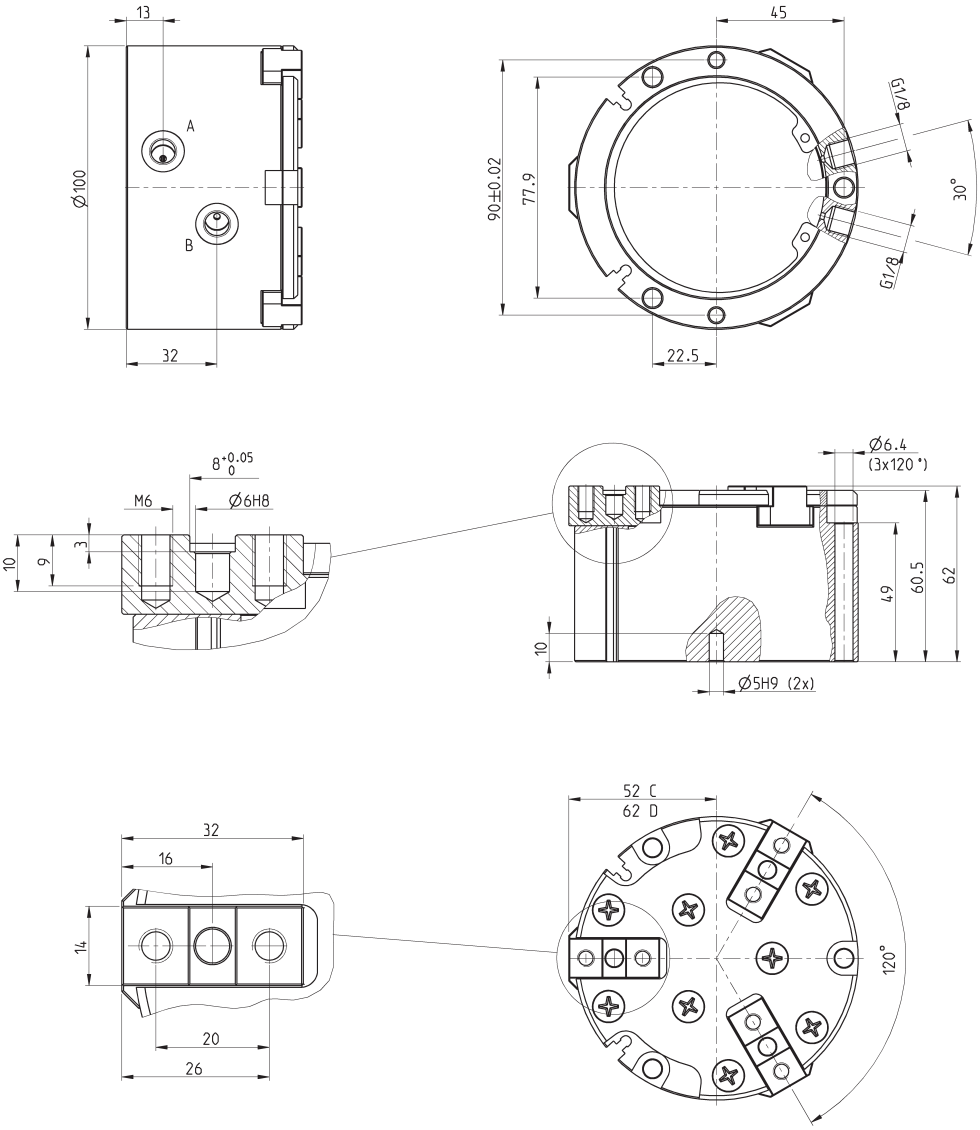

Mod.	Closing gripping force each jaw at 6 bar (N)	Total closing gripping force at 6 bar (N)	Opening gripping force each jaw at 6 bar (N)	Total opening gripping force at 6 bar (N)	Stroke per jaw (mm)	Working pressure (bar)	Working temperature (°C)	Repeatability (mm)	Opening T (ms)	Closing T (ms)	Weight (Kg)
CGCN-100	677	2030	751	2254	10	2 ÷ 8	5 ÷ 60	≤ 0.05	110	125	1.36

Serie CGCN grippers, size 125mm

DRAWING LEGEND:
A = Opening of air connection
B = Closing of air connection
C = Closed gripper
D = Open gripper

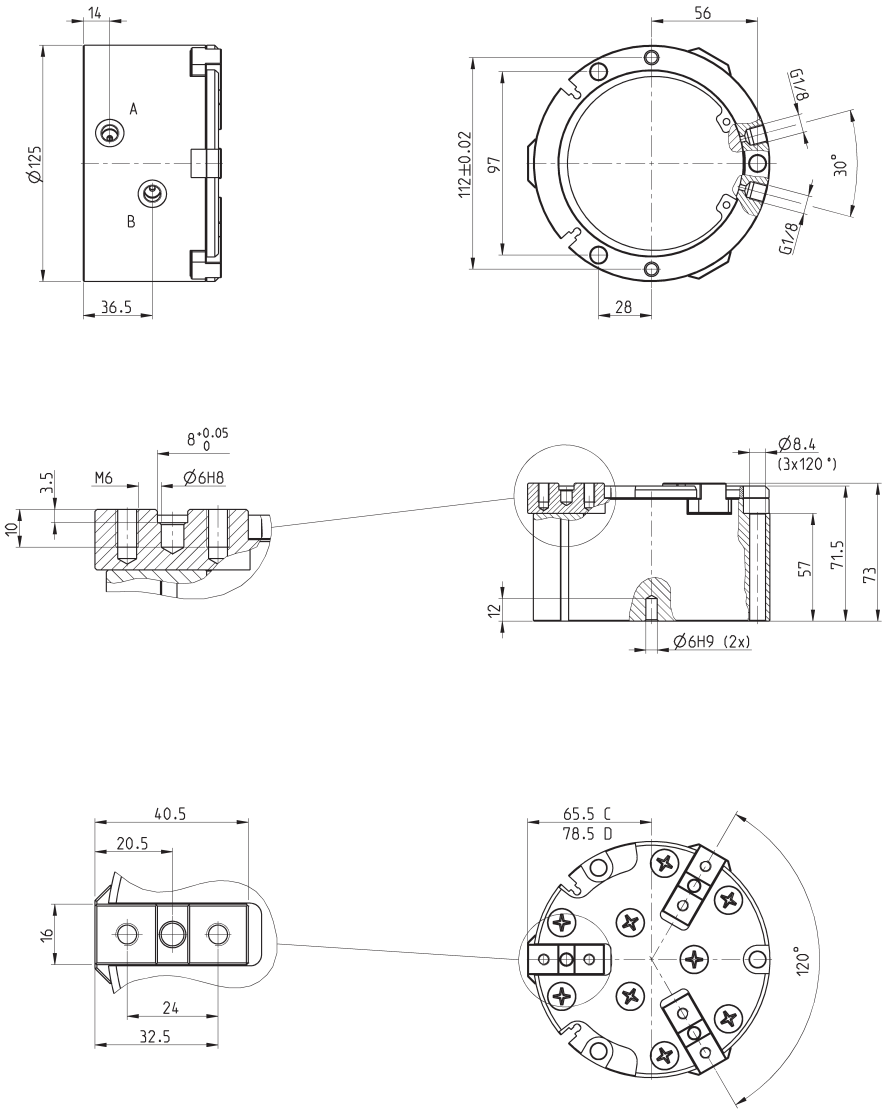

Mod.	Closing gripping force each jaw at 6 bar (N)	Total closing gripping force at 6 bar (N)	Opening gripping force each jaw at 6 bar (N)	Total opening gripping force at 6 bar (N)	Stroke per jaw (mm)	Working pressure (bar)	Working temperature (°C)	Repeatability (mm)	Opening T (ms)	Closing T (ms)	Weight (Kg)
CGCN-125	1093	3280	1195	3584	13	2 ÷ 8	5 ÷ 60	≤ 0.05	141	161	2.44

GRIPPING FORCE PER SINGLE JAW

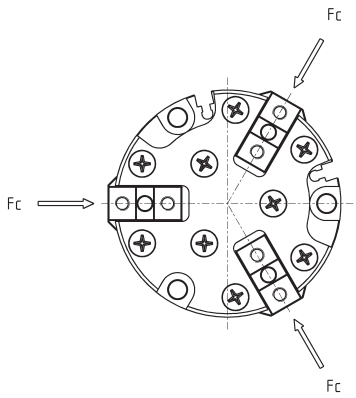

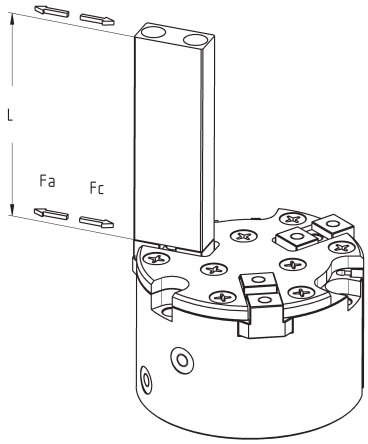

The total gripping force has to be calculated as follows:
Total Fc = Fc x 3
Total Fa = Fa x 3

Fc = closing gripping force
Fa = opening gripping force
L = gripping point length

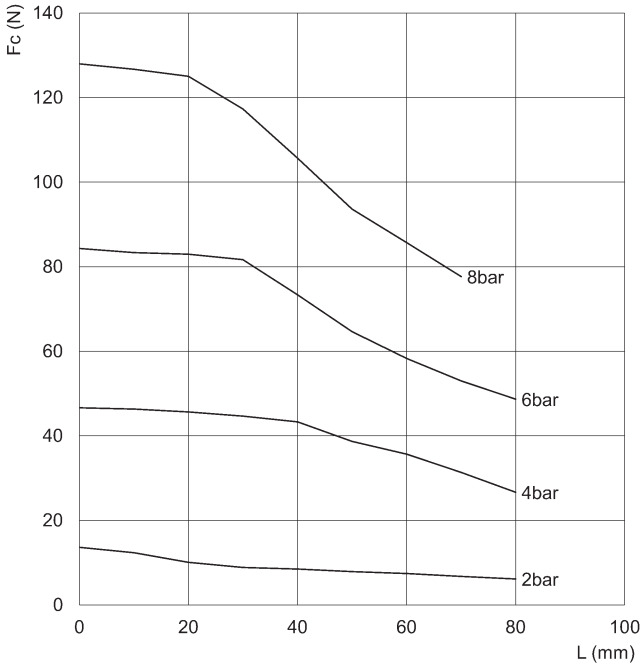

CGCN-050

Fc = closing gripping force
L = gripping point length

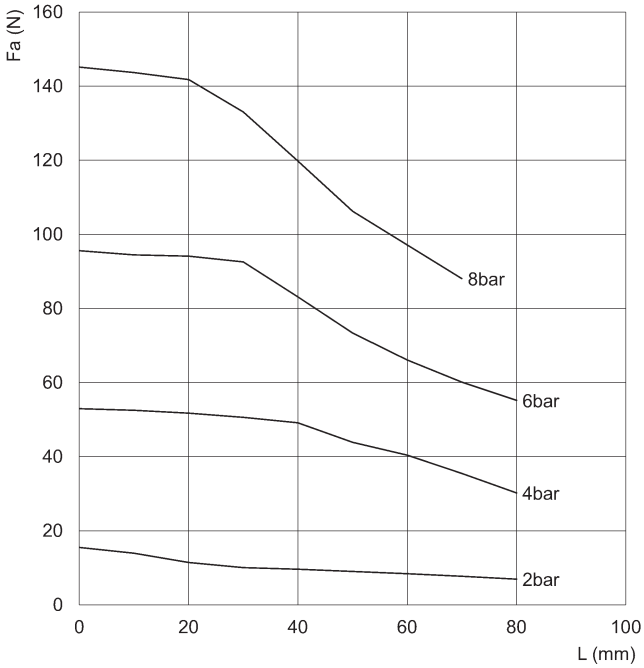

CGCN-050

Fa = opening gripping force
L = gripping point length

GRIPPING FORCE PER SINGLE JAW

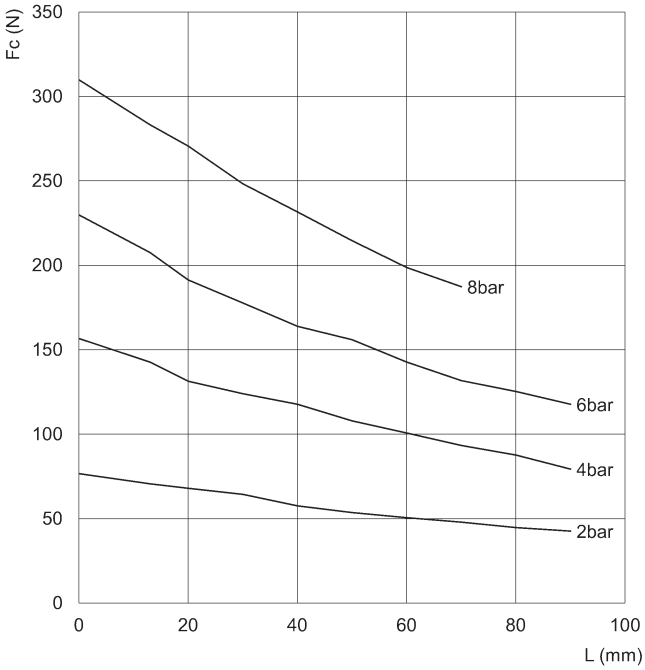

CGCN-064

Fc = closing gripping force
L = gripping point length

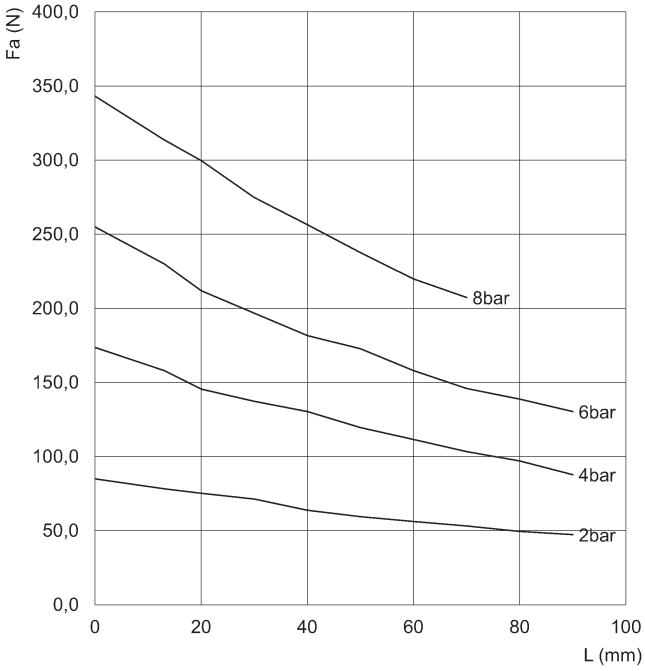

CGCN-064

Fa = opening gripping force
L = gripping point length

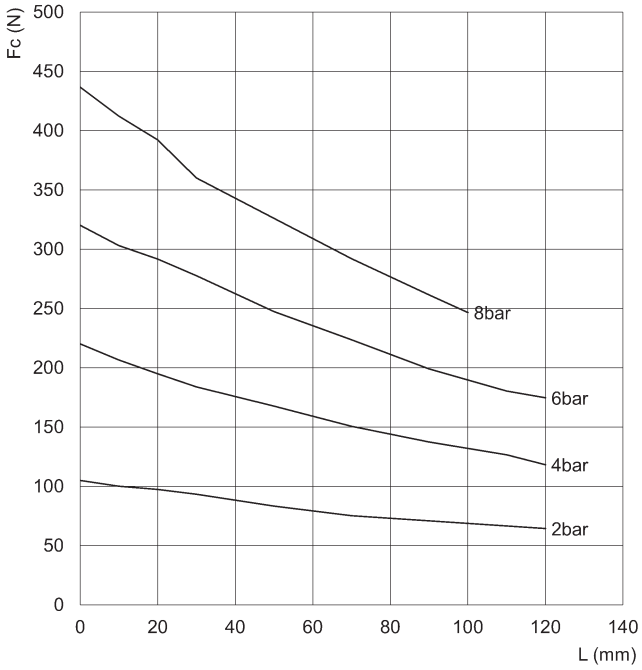

CGCN-080

Fc = closing gripping force
L = gripping point length

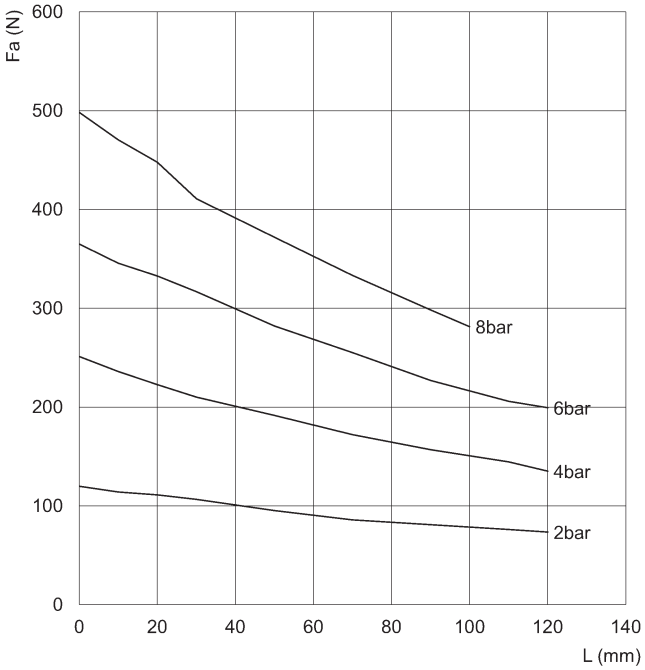

CGCN-080

Fa = opening gripping force
L = gripping point length

GRIPPING FORCE PER SINGLE JAW

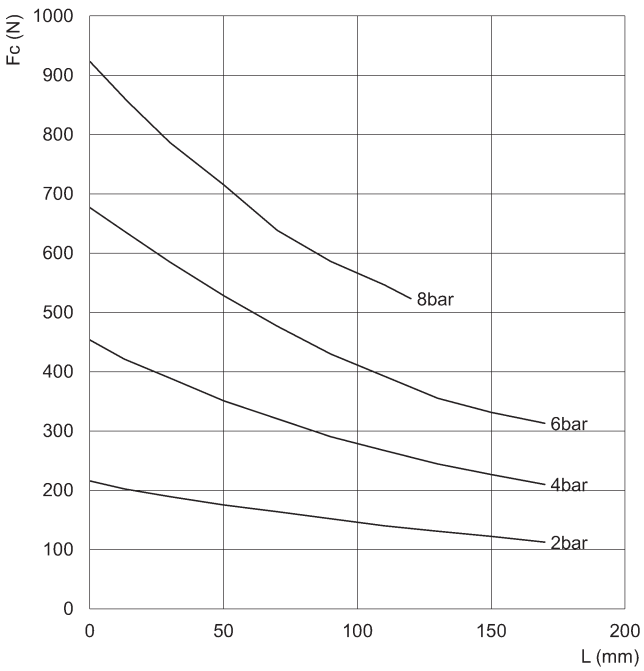

CGCN-100

Fc = closing gripping force
L = gripping point length

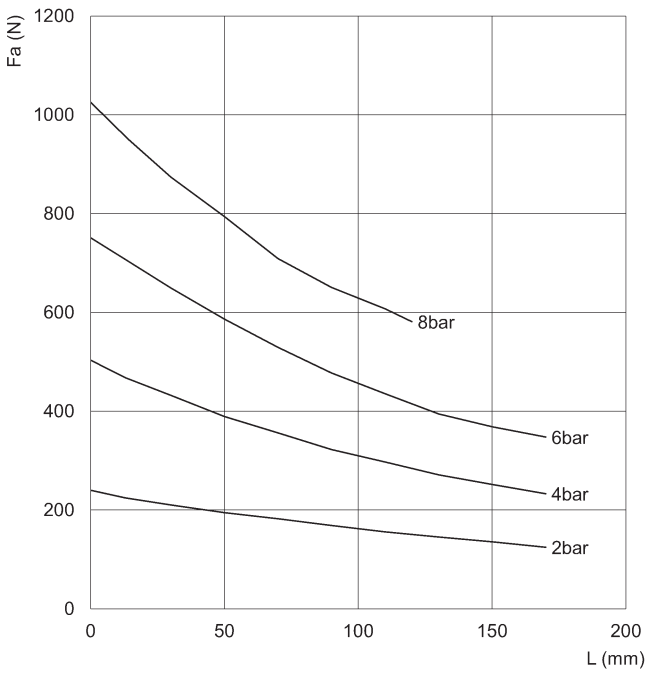

CGCN-100

Fa = opening gripping force
L = gripping point length

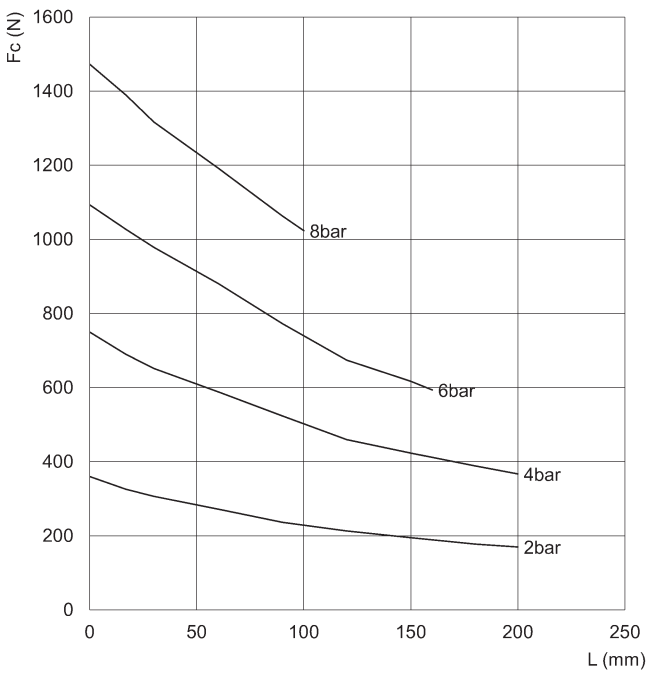

CGCN-125

Fc = closing gripping force
L = gripping point length

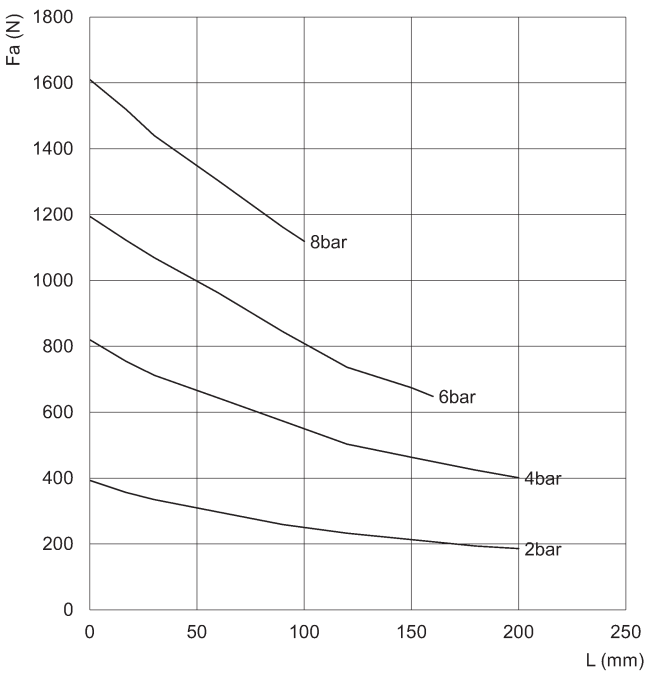

CGCN-125

Fa = opening gripping force
L = gripping point length

Examples of mounting

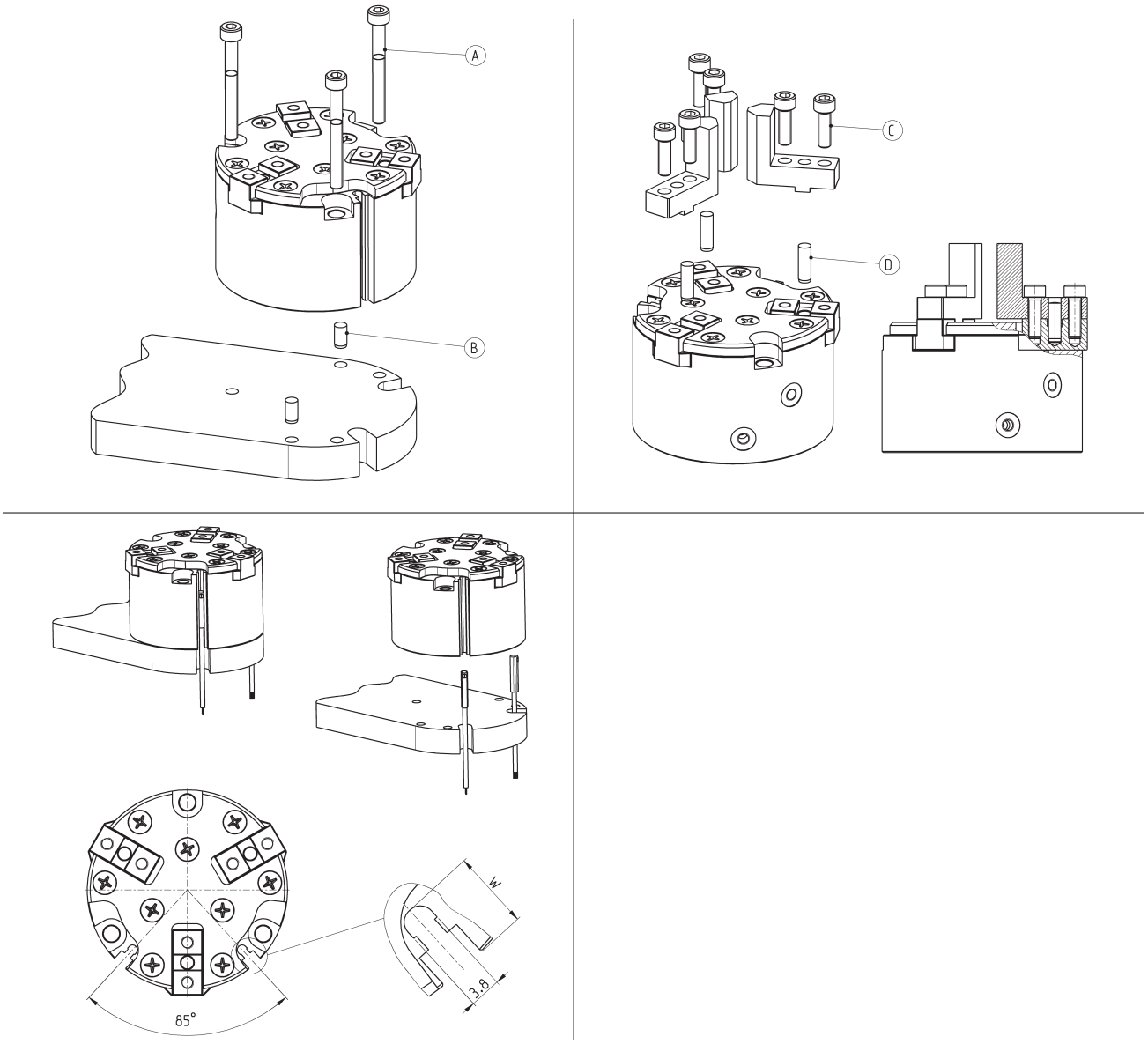

Mod.	A	B	C	D	W
CGCN-050	M3	Ø3	M3	Ø4	6
CGCN-064	M5	Ø4	M4	Ø4	6.4
CGCN-080	M6	Ø5	M5	Ø5	9.5
CGCN-100	M6	Ø5	M6	Ø6	8.6
CGCN-125	M8	Ø6	M6	Ø6	11

Series RPGA sprue grippers
Size 20mm

Angular, not self-centering, single-acting, Normally Open
Models available: Flat Finger, Curved Finger, Short Finger, Flat Finger with sensor slot, Curved Finger with sensor slot

Thanks to a piston with a size of 20mm and to the direct transfer of the force from the piston to the fingers,
Series RPGA guarantees a strong and a safe grip.

Their technical features ensure a high gripping force and make these grippers particularly suitable in the removal of injection molded items.
The surface treatments on each metallic part make this series very wear resistant.

D and E models are provided with a finger having a slot for the installation of an inductive sensor.

GENERAL DATA

Operation	single-acting, Normally Open
Materials	anodized aluminium body and fingers, PU seals
Working pressure	2.5 bar ÷ 8 bar
Working temperature	0°C ÷ 60°C
Max frequency	2.5 Hz
Lubrication	Not necessary
Air ports	G1/8
Media	Filtered air, without lubrication
Size	20 mm
Weights	120 g (models A and B); 125 g (models C, D, E)
Gripping torque at 6 bar	310 Ncm
Opening torque at 6 bar	25 Ncm
Gripping force at 6 bar	90 N
Closing time without load	20 ms
Opening time	75 ms

CODING EXAMPLE

RPGA	-	20	-	A

RPGA	SERIES
20	SIZE: 20 = ø 20 mm
A	TYPE OF CONSTRUCTION: A = Flat finger B = Curved finger C = Short finger with mounting holes for extensions D = Flat finger for sensor E = Curved finger for sensor

Flat finger gripper Mod. RPGA-20-A - dimensions

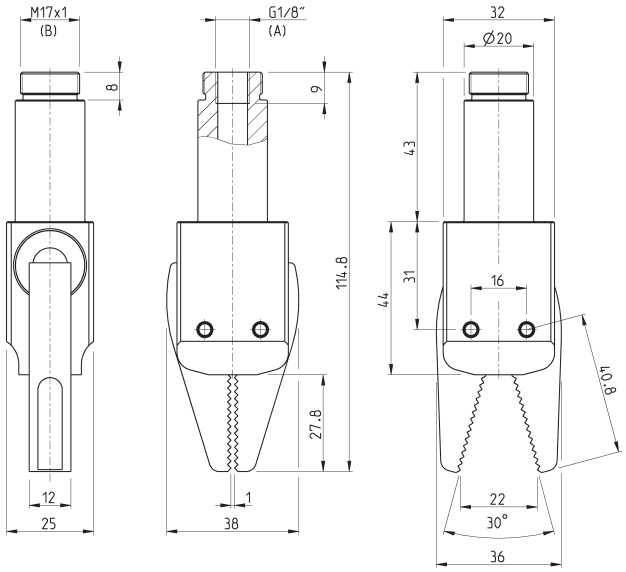

A = connection port
B = fixing thread

Mod.
RPGA-20-A

Curved finger gripper Mod. RPGA-20-B - dimensions

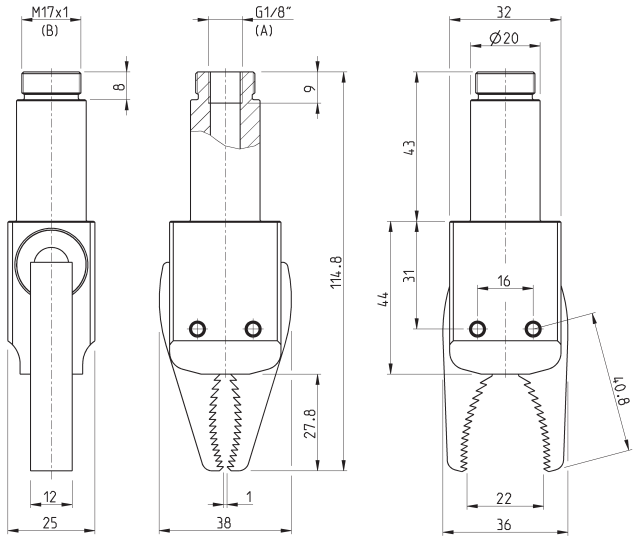

A = connection port
B = fixing thread

Mod.
RPGA-20-B

Short finger gripper Mod. RPGA-20-C - dimensions

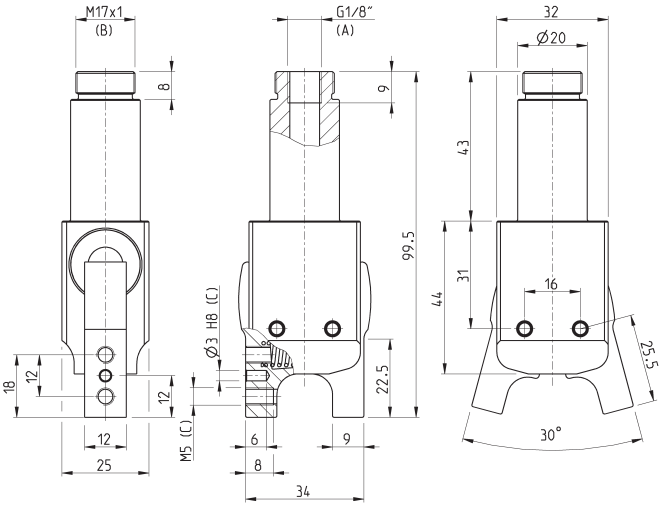

A = connection port
B = fixing thread
C = fixing holes

Mod.
RPGA-20-C

Flat finger gripper with sensor slot Mod. RPGA-20-D - dimensions

Note: the sensor is not supplied with the gripper

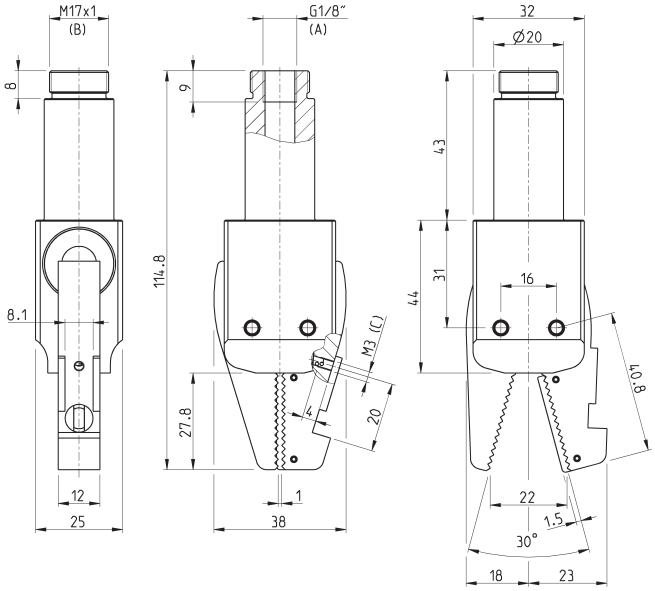

A = connection port
B = fixing thread
C = sensor fixing hole

Mod.
RPGA-20-D

Curved finger gripper with sensor slot Mod. RPGA-20-E - dimensions

Note: the sensor is not supplied with the gripper

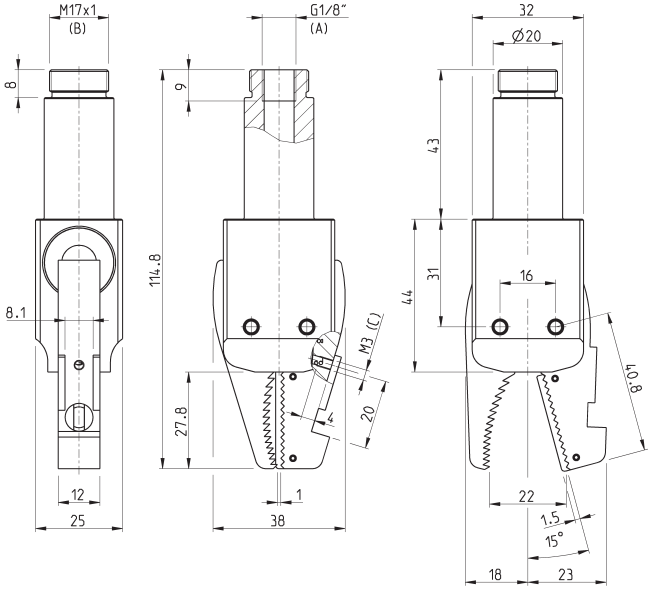

A = connection port
B = fixing thread
C = sensor fixing hole

Mod.
RPGA-20-E

Series RPGB sprue grippers
Size 8, 12mm

Angular, not self-centering, single-acting, Normally Open
Models: Flat Finger, Short Finger, Flat Finger with sensor

- Suitable for plastic injection molding sector
- Easy to install
- Compact and lightweight
- Wear resistant
- Models RPGB-08-D and RPGB-12-D are supplied with sensor CSD-362 already mounted

The external design, the choice of materials and the search for miniaturization makes Series RPGB a compact and lightweight solution.
The D model is provided with a finger having a slot for the installation of a magnetic sensor which is able to detect the grip of the piece.

Its technical features ensure a high gripping force and make this gripper particularly suitable in the removal of injection molded items.
The surface treatments on each metallic part make this series very wear resistant.

GENERAL DATA

Operation	single-acting, Normally Open
Materials	anodized aluminium body and fingers, HNBR seals
Working pressure	2.5 bar ÷ 8 bar
Working temperature	0°C ÷ 60°C
Max frequency	3 Hz
Lubrication	Not necessary
Air ports	M5
Media	Filtered air, class 6.8.4 according to ISO 8573-1, without lubrication
Size	8, 12 mm
Weights	15 g (size 8) - 50 g (size 12)
Gripping torque at 6 bar **Opening torque at 6 bar** **Gripping force at 6 bar**	25 Ncm (size 8) - 90 Ncm (size 12) 2 Ncm (size 8) - 5 Ncm (size 12) 7 N (size 8) - 30 N (size 12)
Closing time without load	10 ms
Opening time	30 ms

CODING EXAMPLE

RPGB	**-**	**12**	**-**	**A**

RPGB	SERIES
12	SIZE: 08 = ø 8 mm 12 = ø 12 mm
A	TYPE OF CONSTRUCTION: A = Flat finger C = Short finger with mounting holes for extensions D = Flat finger with sensor mounted (Mod. CSD-362)

Flat finger gripper Mod. RPGB-08-A - dimensions

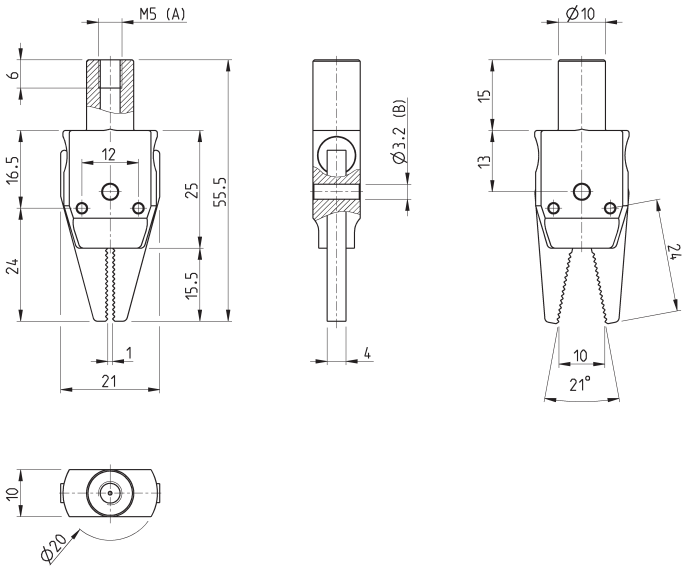

A = port connection
B = mounting hole

Mod.
RPGB-08-A

Short finger gripper Mod. RPGB-08-C - dimensions

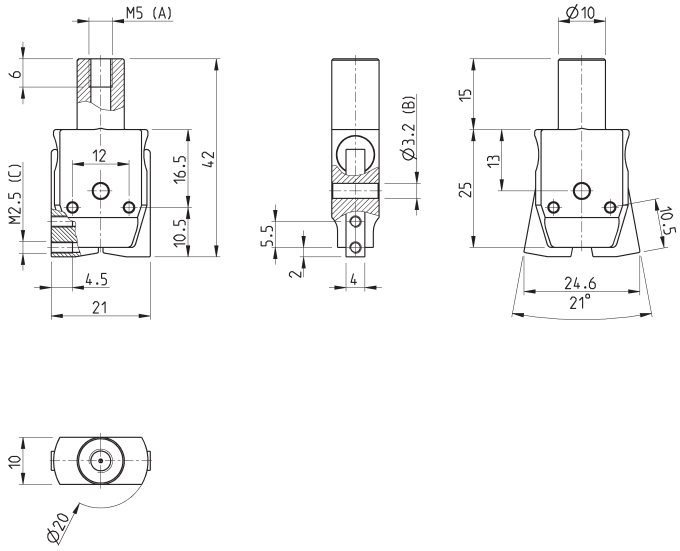

A = port connection
B = mounting hole
C = mounting thread

Mod.
RPGB-08-C

Flat finger gripper with sensor slot Mod. RPGB-08-D - dimensions

This model is supplied with sensor CSD-362 mounted.

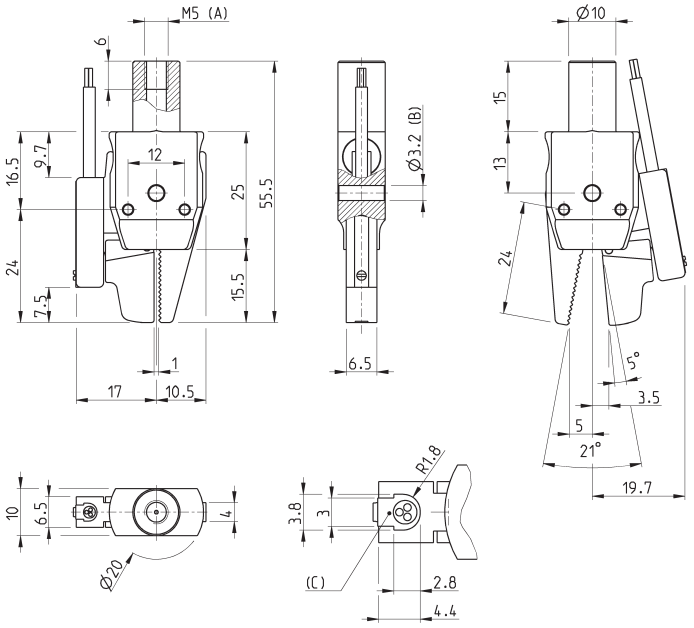

A = connection port
B = mounting hole
C = sensor groove

Mod.
RPGB-08-D

Flat finger gripper Mod. RPGB-12-A - dimensions

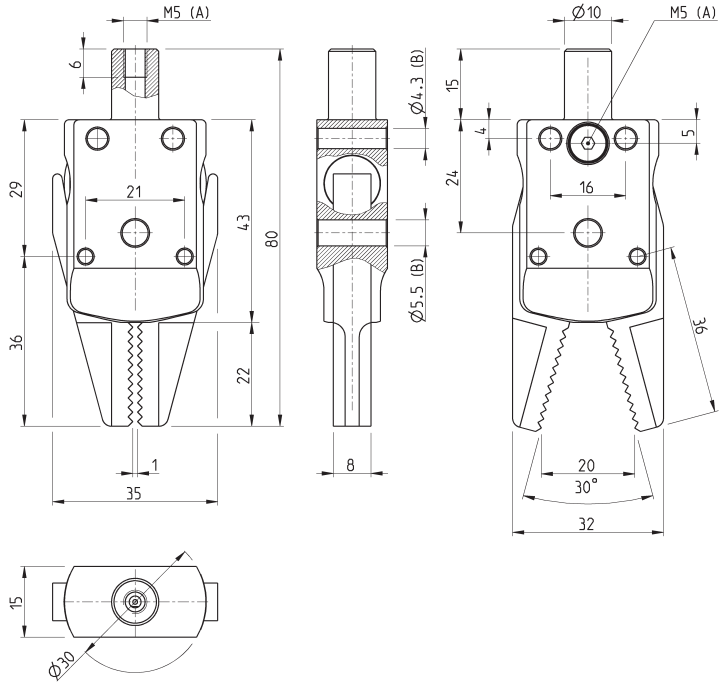

A = port connection
B = mounting holes

Mod.
RPGB-12-A

Short finger gripper Mod. RPGB-12-C - dimensions

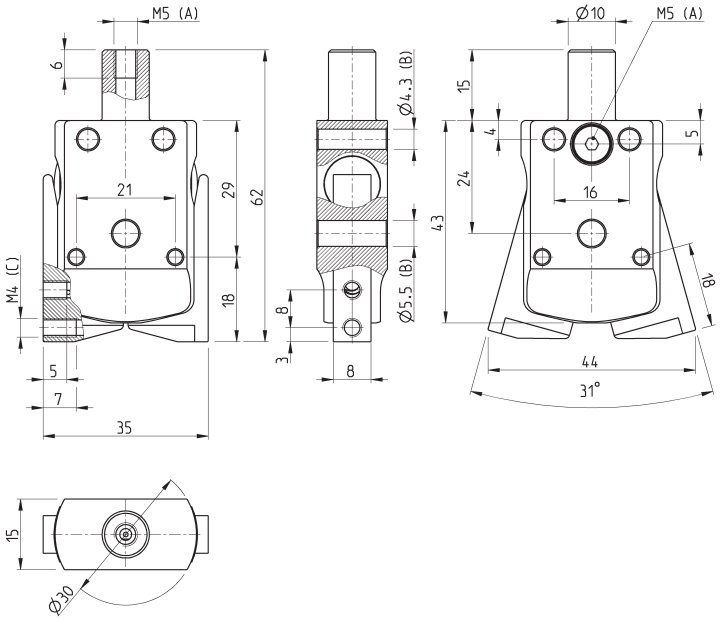

A = port connection
B = mounting holes
C = mounting thread

Mod.
RPGB-12-C

Flat finger gripper with sensor slot Mod. RPGB-12-D - dimensions

This model is supplied with sensor CSD-362 mounted.

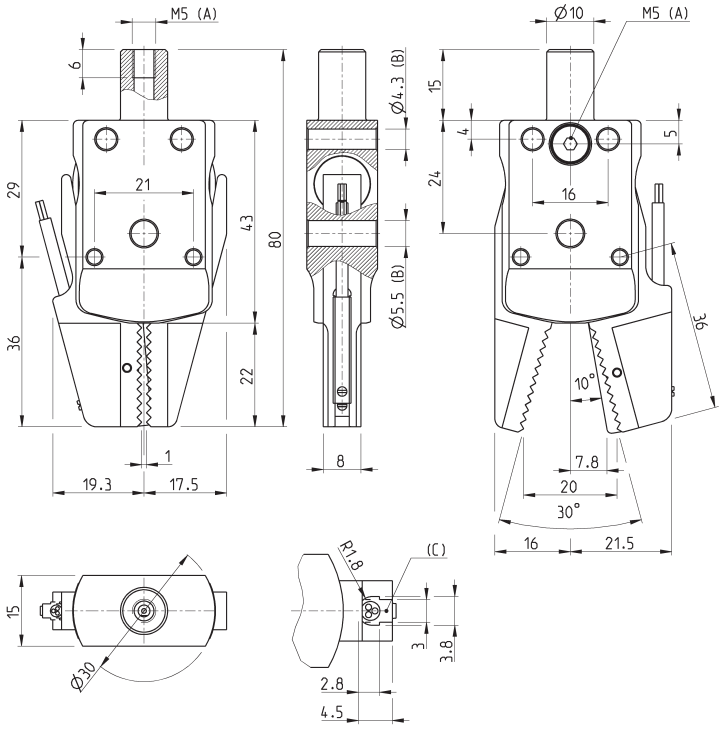

A = port connection
B = mounting hole
C = sensor groove

Mod.
RPGB-12-D

Series CSD magnetic proximity switches with 3-wire cable

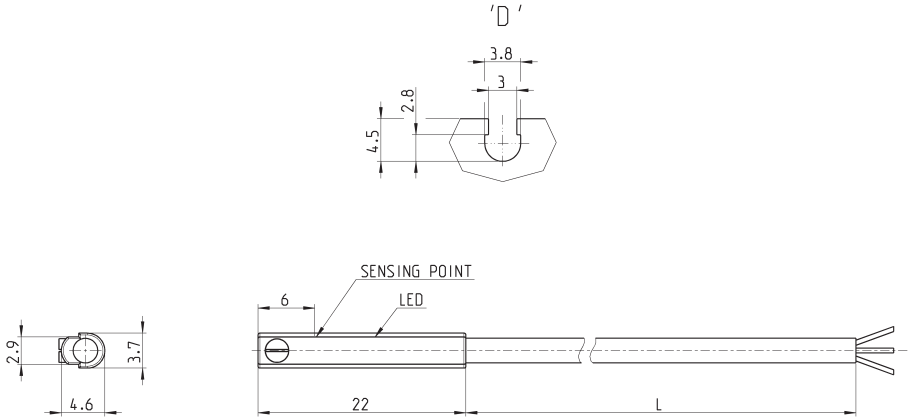

Mod.	Operation	Connections	Voltage	Output	Max. current	Max Load	Protection	L = length cable
CSD-332	Magnetoresistive	3 wires	10 ÷ 27 DC	PNP	200 mA	6W	Against polarity reversing and overvoltage	2 m

Series CSD magnetic proximity switches with male connector M8

Length cable 0,3 mt.

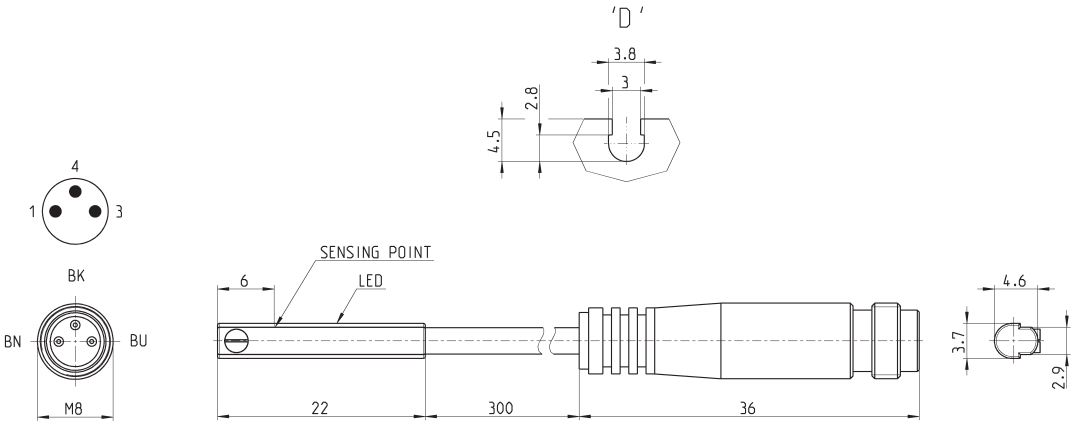

Mod.	Operation	Connection	Voltage	Output	Max. current	Max load	Protection
CSD-362	Magnetoresistive	3 wires with M8 connector	10 ÷ 27 DC	PNP	200 mA	6W	Against polarity reversing and overvoltage

Extension with connector M8, 3 Pin Male / Female

Non shielded

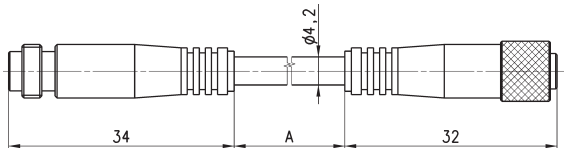

Mod.	cable length "L" (m)
CS-DW03HB-C250	2,5
CS-DW03HB-C500	5

Circular connectors M8, 3 Pin Female

With PU sheathing, non shielded cable.
Protection class: IP65

BN = Brown
BK = Black
BU = Blue

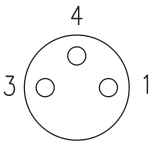

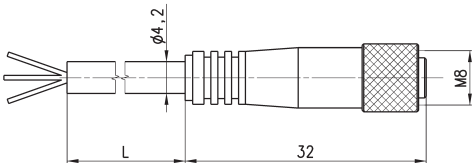

Mod.	L = cable length (m)
CS-2	2
CS-5	5
CS-10	10

Series VTCF flat suction pads (round)

Universal suction pads in NBR or Silicone.
Diameters from 3.5 to 95 mm with thread size M3, M5, G1/8, G1/4, both male and female.

- Wide range of diameters, all available in materials NBR or Silicone.
- Low profile, with reduced intrinsic volume which enables short cycle times and/or the use of smaller vacuum generators.
- Compact design for good resistence towards transversal forces at high accelerations, thus suitable for application with fast movements.
- Negligible movement of the piece in suction phase.

Series VTCF flat suction pads consist of a nipple and rubber part which are delivered separately. In fact, both components can be ordered separately as spare parts. From diameter 60 mm and up a mounting plate is vulcanised into the rubber part to which the nipple should be mounted.

These suction pads are generally used for handling of objects with smooth or slightly curved surfaces such as sheets of different materials, extruded profiles, cardboard boxes, plastic components, wood panels etc.

Applications:
- Handling of flat parts with smooth or slight rough surfaces
- Silicone version for the handling of parts at high temperatures

GENERAL DATA

Description	robust hard-wearing suction pads consisting of suction pad VTCF and connection nipple
Constuction	- nipples and suction pads are supplied not assembled - diameters of 60 mm and more: nipple screwed into supporting plate vulcanised to the pad
Maintenance	it is possible to replace the soft element
Working temperature	NBR version: -30°C ÷ +120°C (for short time <30 sec.); -10°C ÷ +70°C (long-term) SILICONE version: -50°C ÷ +220°C (for short time <30 sec.); -30°C ÷ +180°C (long-term)

TECHNICAL DATA

Mod./Diameter	Suction force (N)*	Int. volume (cm^3)	Min. convex curvature radius (mm)	Internal tube diameter (mm)
VTCF-0035	0,42	0,002	2	2
VTCF-0050	0,75	0,005	4	2
VTCF-0080	2,3	0,03	5	2
VTCF-0100	4	0,07	6	2
VTCF-0150	9	0,4	9	4
VTCF-0200	15,5	0,8	13	4
VTCF-0250	26,5	1,3	18	4
VTCF-0300	34	1,3	26	4
VTCF-0350	44	2,7	31	4
VTCF-0400	57,7	3,8	37	4
VTCF-0500	91	7	41	4
VTCF-0600	125	10	70	6
VTCF-0800	260	25	100	6
VTCF-0950	350	35	150	6

CODING EXAMPLE

VT	C	F	-	0035	N	-	M3	M

VT	SERIES VT = Suction pad
C	SHAPE C = round
F	VERSION F = flat
0035	DIAMETERS 0035= 3,5 mm 0050 = 5,0 mm 0080 = 8,0 mm 0100 = 10,0 mm 0150 = 15,0 mm 0200 = 20,0 mm 0250 = 25,0 mm 0300 = 30,0 mm 0350 = 35,0 mm 0400 = 40,0 mm 0500 = 50,0 mm 0600 = 60,0 mm 0800 = 80,0 mm 0950 = 95,0 mm
N	MATERIALS N = NBR S = Silicone
M3	THREAD SIZE M3 = M3 M5 = M5 1/8 = G1/8 1/4 = G1/4
M	THREAD M = male F = female

Suction pad VTCF-0035 - male thread

* = N for suction pad in NBR - S for suction pad in Silicone (add the required letter when placing an order)

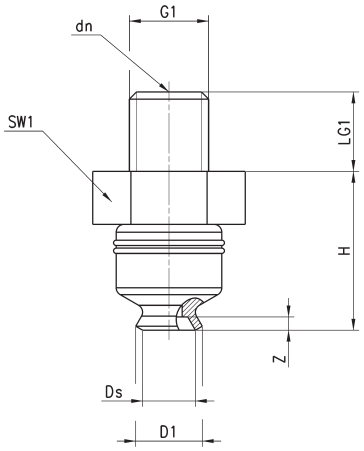

Tolerances for elastomer parts according to M3 - DIN 7715

VEN1

DIMENSIONS										
Suction pad with nipple	D1	dn	Ds	G1	H	LG1	SW1	Z	Suction pad	Nipple
VTCF-0035*-M3M	3,9	1	3,5	M3 M	6	3	5	0,5	VTCF-0035*	NPV-A-M3-M

Suction pad VTCF-0050 to 0500 - male thread

* = N for suction pad in NBR - S for suction pad in Silicone (add the required letter when placing an order)

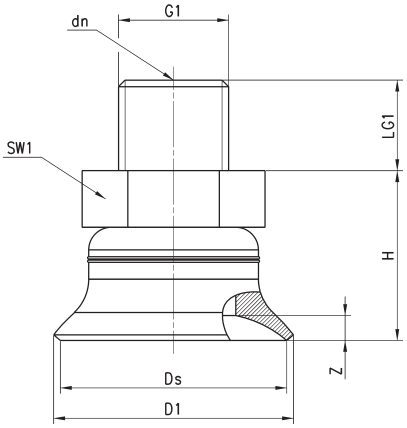

Tolerances for elastomer parts according to M3 - DIN 7715

VEN1

DIMENSIONS										
Suction pad with nipple	D1	dn	Ds	G1	H	LG1	SW1	Z	Suction pad	Nipple
VTCF-0050*-M5M	5,4	2	5	M5 M	11,5	4,5	8	0,9	VTCF-0050*	NPV-B-M5-M
VTCF-0080*-M5M	8,5	2	8	M5 M	12	4,5	8	1,4	VTCF-0080*	NPV-B-M5-M
VTCF-0100*-M5M	10,7	2	10	M5 M	12,5	4,5	8	1,3	VTCF-0100*	NPV-B-M5-M
VTCF-0150*-1/8M	15,8	2	15	G1/8 M	13	8	14	1,9	VTCF-0150*	NPV-G-1/8-M
VTCF-0200*-1/8M	21,2	2,4	20	G1/8 M	15	8	14	2,3	VTCF-0200*	NPV-H-1/8-M
VTCF-0250*-1/8M	25,8	2,4	25	G1/8 M	19	8	14	3	VTCF-0250*	NPV-L-1/8-M
VTCF-0300*-1/8M	29,6	2,4	28,5	G1/8 M	17	8	14	2	VTCF-0300*	NPV-L-1/8-M
VTCF-0350*-1/8M	35,6	2,4	35	G1/8 M	19	8	14	3	VTCF-0350*	NPV-L-1/8-M
VTCF-0400*-1/8M	41,6	2,4	40	G1/8 M	19	8	14	3,5	VTCF-0400*	NPV-L-1/8-M
VTCF-0500*-1/8M	51,1	2,4	50	G1/8 M	20	8	14	4	VTCF-0500*	NPV-M-1/8-M

Suction pad VTCF-0050 to 0500 - female thread

* = N for suction pad in NBR - S for suction pad in Silicone (add the required letter when placing an order)

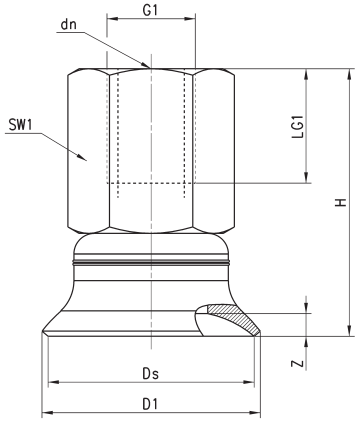

VEN1

Tolerances for elastomer parts according to M3 - DIN 7715

DIMENSIONS										
Suction pad with nipple	D1	dm	Ds	G1	H	LG1	SW1	Z	Suction pad	Nipple
VTCF-0100*-1/8F	10,7	2	10	G1/8 F	23,5	9	14	1,3	VTCF-0100*	NPV-F-1/8-F
VTCF-0150*-1/8F	15,8	2	15	G1/8 F	24	9	14	1,9	VTCF-0150*	NPV-G-1/8-F
VTCF-0200*-1/8F	21,2	2	20	G1/8 F	26	9	14	2,3	VTCF-0200*	NPV-H-1/8-F
VTCF-0250*-1/8F	25,8	2,4	25	G1/8 F	30	9	14	3	VTCF-0250*	NPV-L-1/8-F
VTCF-0300*-1/8F	29,6	2,4	28,8	G1/8 F	28	9	14	2	VTCF-0300*	NPV-L-1/8-F
VTCF-0350*-1/8F	35,6	2,4	35	G1/8 F	30	9	14	3	VTCF-0350*	NPV-L-1/8-F
VTCF-0400*-1/8F	41,6	2,4	40	G1/8 F	30	9	14	3,5	VTCF-0400*	NPV-L-1/8-F
VTCF-0500*-1/8F	51,1	2,4	50	G1/8 F	31	9	14	4	VTCF-0500*	NPV-M-1/8-F

Suction pad VTCF-0600 to 0950 - male thread

* = N for suction pad in NBR - S for suction pad in Silicone (add the required letter when placing an order)

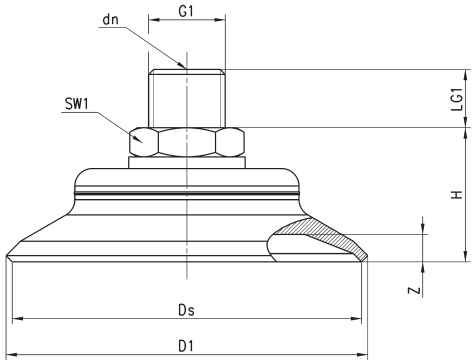

VEN1

Tolerances for elastomer parts according to M3 - DIN 7715

DIMENSIONS										
Suction pad with nipple	D1	dm	Ds	G1	H	LG1	SW1	Z	Suction pad	Nipple
VTCF-0600*-1/4M	62,1	5,5	60	G1/4 M	23	10	17	5	VTCF-0600*	NPV-N-1/4-M
VTCF-0800*-1/4M	82,8	5,5	80	G1/4 M	25	10	17	6	VTCF-0800*	NPV-N-1/4-M
VTCF-0950*-1/4M	97,8	5,5	95	G1/4 M	25,5	10	17	6	VTCF-0950*	NPV-N-1/4-M

Suction pad VTCF-0600 to 0950 - female thread

* = N for suction pad in NBR - S for suction pad in Silicone (add the required letter when placing an order)

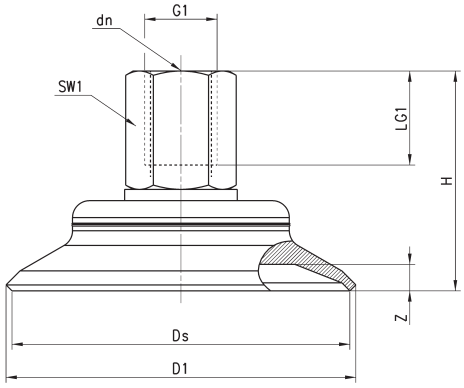

VEN1

Tolerances for elastomer parts according to M3 - DIN 7715

DIMENSIONS										
Suction pad with nipple	D1	dm	Ds	G1	H	LG1	SW1	Z	Suction pad	Nipple
VTCF-0600* 1/4F	62,1	5,5	60	G1/4 F	39	11	17	5	VTCF 0600*	NPV-N-1/4-F
VTCF-0800* 1/4F	82,2	5,5	80	G1/4 F	41	11	17	6	VTCF 0800*	NPV-N-1/4-F
VTCF-0950* 1/4F	97,8	5,5	95	G1/4 F	41,5	11	17	5	VTCF 0950*	NPV-N-1/4-F

Series VTOF flat suction pads (oval)

Flat suction pads in NBR or Silicone which, thanks to their oval shape, can be used to handle narrow and long workpieces. Diameters from 7x3,5 to 60x20 mm with thread size M3, M5, G1/8, G1/4, both male and female.

- Wide range of diameters, all available in materials NBR or Silicone.
- Low profile with reduced intrinsic volume which enables short cycle times and/or the use of smaller vacuum generators.
- Optimised shape for high suction force with reduced size.
- Support on the bottom to avoid permanent deformation on the workpiece.
- Size 30x10 and up equipped with a special clip to prevent unwanted rotation.

Series VTOF flat oval suction pads consist of a nipple and rubber part. The nipples are inserted directly into the rubber part. Pads size 30x10 and larger are further equipped with a special clip in order to avoid unwanted rotation during operation.
The suction pads can also be ordered separately without nipples as spare parts.

Applications:
- Handling of narrow workpieces with small undulated gripping surface such as plates, extruded profiles plastic components, etc
- Handling of frame elements as for example doors, windows, etc
- Silicone version for the handling of pieces at high temperatures

GENERAL DATA

Description	robust and wear resistant pad consisting of rubber part and connection nipple
Construction	- nipples and suction pads are supplied not pre-assembled - size 30x10 mm and up equipped with a clip to avoid rotation
Maintenance	it is possible to replace the rubber part
Working temperature	NBR version: -30°C ÷ +120°C (for short time <30 sec.); -10°C ÷ +70°C (long-term) SILICONE version: -50°C ÷ +220°C (for short time <30 sec.); -30°C ÷ +180°C (long-term)

TECHNICAL DATA

Mod./Diameter	Suction force (N)*	Volume (cm^3)	Min. convex curve radius (mm)	Recommended internal tube diameter (mm)
VTOF-0070-035	1	0,019	3	2
VTOF-0150-050	3,1	0,036	5	2
VTOF-0180-060	4,5	0,058	7	2
VTOF-0300-100	12,2	0,28	10	4
VTOF-0450-150	28,2	0,98	18	6
VTOF-0600-200	50,1	2,3	25	6

CODING EXAMPLE

VT	O	F	-	0070-035	N	-	M3	M

VT	SERIES: VT = suction pad
O	SHAPE: 0 = oval
F	VERSION: F = FLAT
0070-035	DIMENSIONS: 0070-035 = 7,0 x 3,5 mm 0150-050 = 15,0 x 5,0 mm 0180-060 = 18,0 x 6,0 mm 0300-100 = 30,0 x 10,0 mm 0450-150 = 45,0 x 15,0 mm 0600-200 = 60,0 x 20,0 mm
N	MATERIALS: N= NBR S = Silicone
M3	THREAD SIZE: M3 = M3 M5 = M5 1/8 = G1/8 1/4 = G1/4
M	THREAD: M = male F = female

Series VTOF suction pad - male thread

* = N for suction pad in NBR - S for suction pad in Silicone (add the required letter when placing an order)

Tolerances on dimensions for elastomer parts according to M3 - DIN 7715

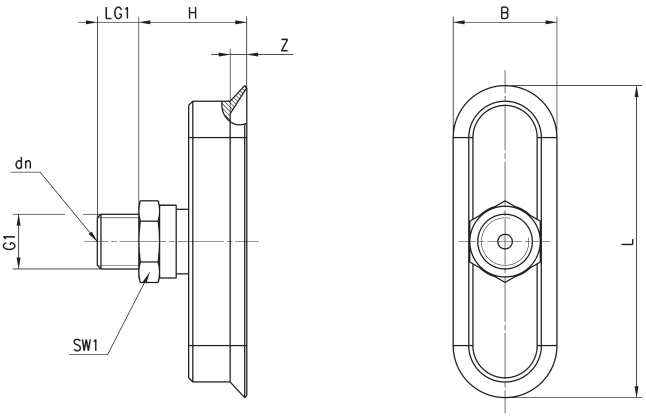

DIMENSIONS										
Suction pad with nipple	B	dn	G1	H	L	LG1	SW1	Z	Suction pad	Nipple
VTOF-0070-035*-M3M	3,5	1	M3M	8	7	3	5	08	VTOF-0070-035*	NPV-A-M3-M
VTOF-0150-050*-M5M	5	2	M5M	17	15	5	8	07	VTOF-0150-050*	NPV-C-M5-M
VTOF-0180-060*-M5M	6	2	M5M	17	18	5	8	08	VTOF-0180-060*	NPV-C-M5-M
VTOF-0300-100*-1/8M	10	3,5	G1/8 M	17	30	8	14	1,5	VTOF-0300-100*	NPV-P-1/8-M
VTOF-0450-150*-1/4M	15	3,5	G1/4 M	26	45	10	17	2	VTOF-0450-150*	NPV-Q-1/4-M
VTOF-0600-200*-1/4M	20	3,5	G1/4 M	26	60	10	17	2,5	VTOF-0600-200*	NPV-Q-1/4-M

Series VTOF suction pad - female thread

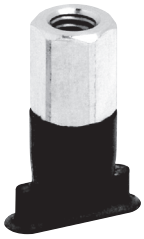

* = N for suction pad in NBR - S for suction pad in Silicone (add the required letter when placing an order)

Tolerances on dimensions for elastomer parts according to M3 - DIN 7715

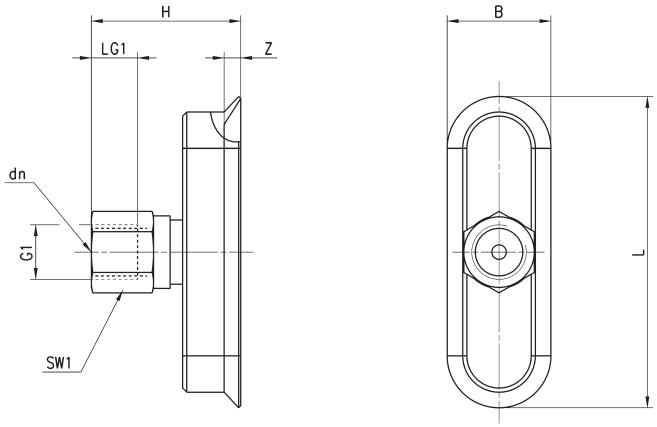

DIMENSIONS										
Suction pad with nipple	B	dm	G1	H	L	LG1	SW1	Z	Suction pad	Nipple
VTOF-0150-050*-M5F	5	2	M5 F	22	15	5,5	8	0,7	VTOF-0150-050*	NPV-C-M5-F
VTOF-0180-060*-M5F	6	2	M5 F	22	18	5,5	8	0,8	VTOF-0180-060*	NPV-C-M5-F
VTOF-0300-100*-1/8F	10	3,5	G1/8 F	25	30	9	14	1,5	VTOF-0300-100*	NPV-P-1/8-F
VTOF-0450-150*-1/4F	15	3,5	G1/4 F	36	45	12	17	2	VTOF-0450-150*	NPV-Q-1/4-F
VTOF-0600-200*-1/4F	20	3,5	G1/4 F	36	60	12	17	2,5	VTOF-0600-200*	NPV-Q-1/4-F

Series VTCL bellows suction pads (round) - 1,5 folds

Series VTCL bellows suction pads available in NBR or Silicone which allow an optimal damping when placed on the workpiece. Diameters from 11 to 53 mm with thread size M5, G1/8, G1/4, both male and female.

- Wide range of diameters, available in NBR or Silicone.
- Soft, tapered sealing lip for very good adaption to curved or uneven workpiece surfaces in general.
- High suction force and optimal damping when placed on the workpiece.
- Support on the bottom to avoid permanent deformation of the workpiece.
- Very stiff top fold for good stability and good resistance towards transversal forces at high accelerations.
- Good compensation of possible height differences on the workpiece.
- Optimised shape with 1,5 folds.

Series VTCL bellows suction pads (1,5 folds) have a rugged design and consist of a nipple and rubber part.
The nipples are inserted directly into the rubber part.
The rubber parts can also be ordered separately without nipples as spare parts.
Materials: NBR or Silicone

Applications:
- Handling of even or uneven workpieces such as planels for car bodies, tubes, cardboard boxes
Handling of fragile workpieces such as electronics components, injection moulded pieces, etc
- Handling of welded pieces
- Silicone version for handling high temperatures pieces

GENERAL DATA

Description	wear resistant suction pad consisting of rubber part VTCL with 1,5 folds and connection nipple
Construction	nipples and suction pads are supplied not pre-assembled
Maintenance	it is possible to replace the rubber part
Working temperature	NBR version: -30°C ÷ +120°C (for short time <30 sec.); -10°C ÷ +70°C (long-term) SILICONE version: -50°C ÷ +220°C (for short time <30 sec.); -30°C ÷ +180°C (long-term)

TECHNICAL DATA

Mod./Diameter	Suction force (N)*	Pull-off force (N)* (convex)	Volume (cm^3)	Min. curve radius (mm)	Recommended internal tube diam. (mm)
VTCL-110	0,95	3,8	0,225	5	4
VTCL-140	1,2	5	0,42	6	4
VTCL-160	2,3	6,7	0,75	7	4
VTCL-200	4,7	10,7	1,15	9	4
VTCL-250	7,3	17,3	3,15	11	4
VTCL-330	13,6	39,6	4,75	15	6
VTCL-430	22,8	64,5	9,25	30	6
VTCL-530	51,3	95	26,25	40	6

CODING EXAMPLE

VT	C	L	-	110	N	-	M5	M

VT	SERIES VT = Suction pad
C	SHAPE C = round
L	VERSION L = bellows 1,5 folds
110	DIAMETERS 110 = 11,0 mm 140 = 14,0 mm 160 = 16,0 mm 200 = 20,0 mm 250 = 25,0 mm 330 = 33,0 mm 430 = 43,0 mm 530 = 53,0 mm
N	MATERIALS N = NBR S = Silicone
M5	THREAD SIZE M5 = M5 1/8 = G1/8 1/4 = G1/4
M	THREAD M = male F = female

Series VTCL suction pad - male thread

* = N for suction pad in NBR
S for suction pad in Silicone
(add the required letter when placing an order)

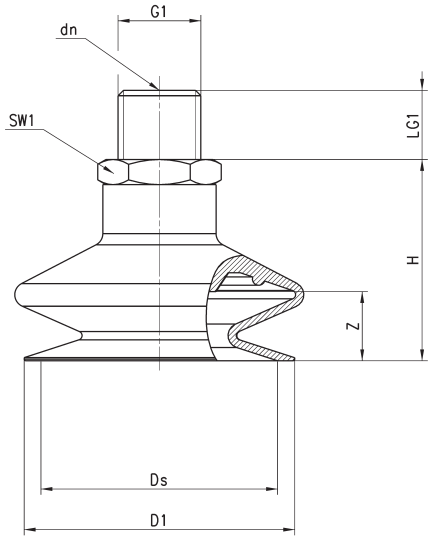

DIMENSIONS										
Suction pad with nipple	D1	dn	Ds	G1	H	LG1	SW1	Z	Suction pad	Nipple
VTCL-110*-1/8M	11	3,5	10,4	G1/8 M	22	7,5	14	4	VTCL-110*	NPV-R-1/8-M
VTCL-110*-M5M	11	2,5	10,4	M 5 M	21	5	7	4	VTCL-110*	NPV-D-M5-M
VTCL-140*-1/8M	13	3,5	12,5	G1/8 M	22	7,5	14	5	VTCL-140*	NPV-R-1/8-M
VTCL-140*-M5M	13	2,5	12,5	M 5 M	21	4,5	7	5	VTCL-140*	NPV-D-M5-M
VTCL-160*-1/8M	16,5	3,5	15,6	G1/8 M	25	7,5	14	6	VTCL-160*	NPV-R-1/8-M
VTCL-160*-M5M	16,5	2,5	15,6	M 5 M	24	5	7	6	VTCL-160*	NPV-D-M5-M
VTCL-200*-1/8M	18,3	3,5	18,1	G1/8 M	21,5	7,5	14	5	VTCL-200*	NPV-R-1/8-M
VTCL-200*-M5M	18,3	2,5	18,1	M 5 M	20,5	4,5	7	5	VTCL-200*	NPV-D-M5-M
VTCL-250*-1/8M	23,7	3,5	22,5	G1/8 M	29	7,5	14	12	VTCL-250*	NPV-R-1/8-M
VTCL-330*-1/4M	33	4,4	30	G1/4 M	31	11	17	12	VTCL-330*	NPV-S-1/4-M
VTCL-430*-1/4M	43	4,4	38	G1/4 M	32	11	17	10	VTCL-430*	NPV-S-1/4-M
VTCL-530*-1/4M	53	4,4	50	G1/4 M	38	11	17	15	VTCL-530*	NPV-S-1/4-M

VEN1

Tolerances for elastomer parts according to M3 - DIN 7715

Series VTCL suction pad - female thread

* = N for suction pad in NBR
S for suction pad in Silicone
(add the required letter when placing an order)

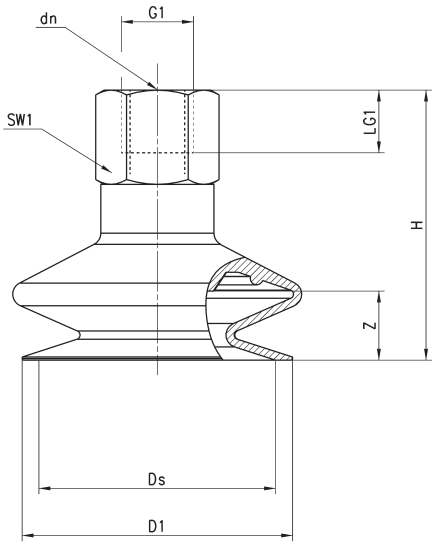

DIMENSIONS										
Suction pad with nipple	D1	dm	Ds	G1	H	LG1	SW1	Z	Suction pad	Nipple
VTCL-110*-1/8F	11	3,5	10,4	G1/8 F	28	8,5	14	4	VTCL-110*	NPV-R-1/8-F
VTCL-140*-1/8F	13	3,5	12,5	G1/8 F	28	8,5	14	5	VTCL-140*	NPV-R-1/8-F
VTCL-160*-1/8F	16,5	3,5	15,6	G1/8 F	31	8,5	14	6	VTCL-160*	NPV-R-1/8-F
VTCL-200*-1/8F	18,3	3,5	18,1	G1/8 F	27,5	8,5	14	5	VTCL-200*	NPV-R-1/8-F
VTCL-250*-1/8F	23,7	3,5	22,5	G1/8 F	35	8,5	14	12	VTCL-250*	NPV-R-1/8-F
VTCL-330*-1/4F	33	4,4	30	G1/4 F	42	12	17	12	VTCL-330*	NPV-S-1/4-F
VTCL-430*-1/4F	43	4,4	38	G1/4 F	43	12	17	10	VTCL-430*	NPV-S-1/4-F
VTCL-530*-1/4F	53	4,4	50	g1/4 F	49	12	17	15	VTCL-530*	NPV-S-1/4-F

VEN1

Tolerances for elastomer parts according to M3 - DIN 7715)

Series VTCN bellows suction pads (round) - 2,5 folds

Series VTCN bellows suction pads, available in NBR or Silicone, are suitable to handle uneven workpiece surfaces or workpiece major height differences. Diameters from 5 to 52 mm with thread size M5, G1/8, G1/4, both male and female.

- Wide range of diameters, in NBR or Silicone versions.
- Soft, tapered sealing lip for very good adaption to curved or uneven workpiece surfaces in general.
- High suction force and optimal damping when placed on the workpiece.
- Support on the bottom to avoid permanent deformation of the workpiece.
- Very stiff top fold for good stability and good resistance towards transversal forces at high accelerations.
- Very good compensation of possible height differences on the workpiece.
- Optimised shape with 2,5 folds.

Series VTCN bellows suction pads (2,5 folds) have a rugged design and consist of a nipple and rubber part.
The nipples are inserted directly into the rubber part.
The rubber parts can also be ordered separately without nipples as spare parts.
Materials: NBR or Silicone

Applications:
- Handling of even or uneven workpieces such as plates for car bodies, tubes, cardboard boxes
- Handling of fragile workpieces such as electronics components, injection moulded pieces, etc
- Handling of welded pieces
- Silicone version for handling of pieces at high temperatures

GENERAL DATA

Description	wear resistant suction pad consisting of rubber part VTCN with 2,5 folds and connection nipple
Construction	nipples and suction pads are supplied not pre-assembled
Maintenance	it is possible to replace the rubber part
Working temperature	NBR version: -30°C ÷ +120°C (for short time <30 sec.); -10°C ÷ +70°C (long-term) SILICONE version: -50°C ÷ +220°C (for short time <30 sec.); -30°C ÷ +180°C (long-term)

TECHNICAL DATA

Mod./Diameter	Suction force (N)*	Pull-off force (N)**	Volume (cm^3)	Min. curve radius (mm) (convex)	Recommended internal tube diameter (mm)
VTCN-050	0,1	0,8	0,033	2	2
VTCN-070	0,1	0,9	0,043	3	4
VTCN-090	0,7	2,3	0,15	5	4
VTCN-120	0,9	3,5	0,6	6	4
VTCN-140	1,2	5,7	0,975	7	4
VTCN-180	2,3	8,5	1,35	9	4
VTCN-200	3,8	12,1	2	10	4
VTCN-250	4,5	19	5,4	12	4
VTCN-320	12	36,9	10	17	6
VTCN-420	13,6	44	19,5	24	6
VTCN-520	27	96	62	35	6

CODING EXAMPLE

VT	C	N	-	050	N	-	M5	M

VT	SERIES VT = Suction pad
C	SHAPE C = round
N	VERSION N = bellows, 2,5 folds
050	DIAMETERS 050= 5,0 mm 070 = 7,0 mm 090 = 9,0 mm 120 = 12,0 mm 140 = 14,0 mm 180 = 18,0 mm 200 = 20,0 mm 250 = 25,0 mm 320 = 32,0 mm 420 = 42,0 mm 520 = 52,0 mm
N	MATERIALS N = NBR S = Silicone
M5	THREAD SIZE M5 = M5 1/8 = G1/8 1/4 = G1/4
M	THREAD M = male F = female

Series VTCN suction pad - male thread

* = N for suction pad in NBR
S for suction pad in Silicone
(add the required letter when placing an order)

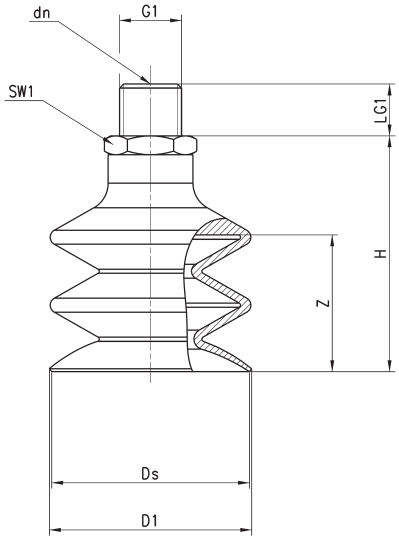

DIMENSIONS										
Suction pad with nipple	D1	dn	Ds	G1	H	LG1	SW1	Z	Suction pad	Nipple
VTCN-050*-M5M	5,5	2	5	M 5 M	18,5	5	8	3	VTCN-050*	NPV-E-M5-M
VTCN-070*-1/8M	6,5	3,5	5,9	G1/8 M	20	7,5	14	4	VTCN-070*	NPV-R-1/8-M
VTCN-070*-M5M	6,5	2,5	5,9	M 5 M	19	5	7	4	VTCN-070*	NPV-D-M5-M
VTCN-090*-1/8M	9,3	3,5	9	G1/8 M	21	7,5	14	3	VTCN-090*	NPV-R-1/8-M
VTCN-090*-M5M	9,3	2,5	9	M 5 M	20	5	7	3	VTCN-090*	NPV-D-M5-M
VTCN-120*-1/8M	12,7	3,5	12	G1/8 M	27	7,5	14	7	VTCN-120*	NPV-R-1/8-M
VTCN-120*-M5M	12,7	2,5	12	M 5 M	26	5	7	7	VTCN-120*	NPV-D-M5-M
VTCN-140*-1/8M	15	3,5	14,5	G1/8 M	28	7,5	14	9	VTCN-140*	NPV-R-1/8-M
VTCN-140*-M5M	15	2,5	14,5	M 5 M	27	5	7	9	VTCN-140*	NPV-D-M5-M
VTCN-180*-1/8M	18,5	3,5	17,2	G1/8 M	28	7,5	14	9	VTCN-180*	NPV-R-1/8-M
VTCN-180*-M5M	18,5	2,5	17,2	M 5 M	27	5	7	9	VTCN-180*	NPV-D-M5-M
VTCN-200*-1/8M	20	3,5	20	G1/8 M	28	7,5	14	9	VTCN-200*	NPV-R-1/8-M
VTCN-200*-M5M	20	2,5	20	M 5 M	27	5	7	9	VTCN-200*	NPV-D-M5-M
VTCN-250*-1/8M	24,7	3,5	23	G1/8 M	40	7,5	14	18	VTCN-250*	NPV-R-1/8-M
VTCN-320*-1/4M	32,6	4,4	32	G1/8 M	41,5	11	17	15	VTCN-320*	NPV-S-1/4-M
VTCN-420*-1/4M	43,5	4,4	42,6	G1/4 M	50	11	17	20	VTCN-420*	NPV-S-1/4-M
VTCN-520*-1/4M	52,5	4,4	52,5	G1/4 M	53	11	17	25	VTCN-520*	NPV-S-1/4-M

VEN1

Tolerances for elastomer parts according to M3 - DIN 7715

Series VTCN suction pad - female thread

* = N for suction pad in NBR
S for suction pad in Silicone
(add the required letter when placing an order)

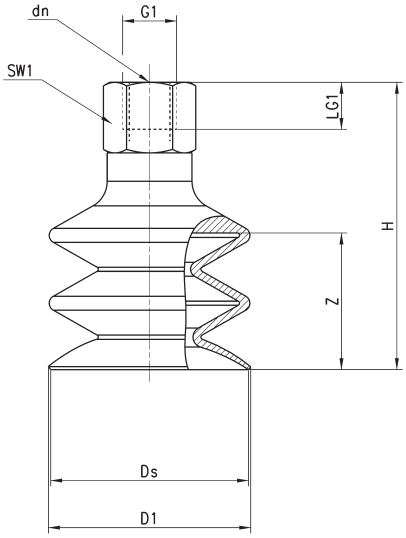

DIMENSIONS										
Suction pad with nipple	D1	dn	Ds	G1	H	LG1	SW1	Z	Suction pad	Nipple
VTCN-050*-M5F	5,5	2	5	M 5 F	18,5	5	8	3	VTCN-050*	NPV-E-M5-F
VTCN-070*-1/8F	6,5	3,5	5,9	G1/8 F	26	8,5	14	4	VTCN-070*	NPV-R-1/8-F
VTCN-090*-1/8F	9,3	3,5	9	G1/8 F	27	8,5	14	3	VTCN-090*	NPV-R-1/8-F
VTCN-120*-1/8F	12,7	3,5	12	G1/8 F	33	8,5	14	7	VTCN-120*	NPV-R-1/8-F
VTCN-140*-1/8F	15	3,5	14,5	G1/8 F	34	8,5	14	9	VTCN-140*	NPV-R-1/8-F
VTCN-180*-1/8F	18,5	3,5	17,2	G1/8 F	34	8,5	14	9	VTCN-180*	NPV-R-1/8-F
VTCN-200*-1/8F	20	3,5	20	G1/8 F	34	8,5	14	9	VTCN-200*	NPV-R-1/8-F
VTCN-250*-1/8F	24,7	3,5	23	G1/8 F	46	8,5	14	18	VTCN-250*	NPV-R-1/8-F
VTCN-320*-1/4F	32,6	4,4	32	G1/4 F	52,5	12	17	15	VTCN-320*	NPV-S-1/4-F
VTCN-420*-1/4F	43,5	4,4	42,6	G1/4 F	61	12	17	20	VTCN-420*	NPV-S-1/4-F
VTCN-520*-1/4F	52,5	4,4	52,5	G1/4 F	64	12	17	25	VTCN-520*	NPV-S-1/4-F

VEN1

Tolerances for elastomer parts according to M3 - DIN 7715

Series VEB basic ejectors

Basic ejectors with no moving parts, based on the Venturi principle.
Version "L" for porosive workpieces.
Version "H" for high vacuum value.

- No moving parts for long life and low maintenance
- Reduced weight
- Rapid generation of vacuum

Series VEB basic ejectors are universal ejectors suitable for several industrial applications.
They are available in two versions:
- Version "L" for porosive workpieces
- Version "H" for high vacuum value (85%)

Applications:
- Industrial robotics in most sectors
- Wood industry
- Packaging industry
- Food industry

GENERAL DATA

Description	- body in anodized Aluminium - internal nozzle in brass - silencer in technopolymer

CODING EXAMPLE

VE	B	-	05	H

VE	SERIES VE = Vacuum ejector
B	VERSION B = basic
05	NOZZLE DIAMETER (MM) 05 = 0,5 mm 07 = 0,7 mm 10 = 1 mm 15 = 1,5 mm 20 = 2 mm 25 = 2,5 mm 30 = 3 mm
H	SUCTION TYPE H = high vacuum L = high suction rate

TECHNICAL DATA

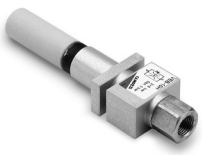

1 = Compressed air inlet
2 = Vacuum inlet
3 = Exhaust

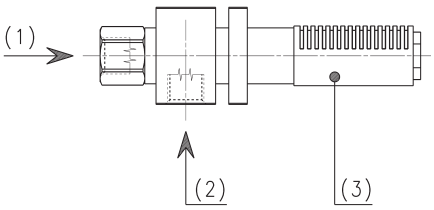

TECHNICAL DATA

Mod.	Ø nozzle (mm)	Degree of evacuation (%)	Suction rate max. (l/min)	Suction rate max. (m^3/min)	Air consumption (l/min)	Air consumption (m^3/h)	Working pressure (bar)	Weight (kg)
VEB-05H	0,5	82	7	0,4	13	0,8	4,5	0,011
VEB-07H	0,7	85	14	0,8	21	1,3	4,5	0,045
VEB-10H	1	85	34	2	49	2,9	5	0,05
VEB-15H	1,5	85	69	4,1	102	6,1	4,5	0,11
VEB-20H	2	85	124	7,4	186	11,2	5	0,13
VEB-20L	2	55	170	10,2	186	11,2	5	0,13
VEB-25H	2,5	85	184	11	275	16,5	5	0,295
VEB-25L	2,5	55	260	15,6	275	16,5	5	0,295
VEB-30H	3	85	240	14,4	392	23,5	5	0,404

Diagrams VEB

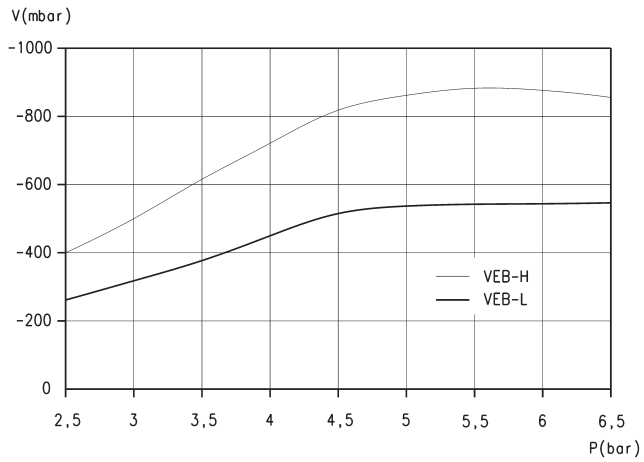

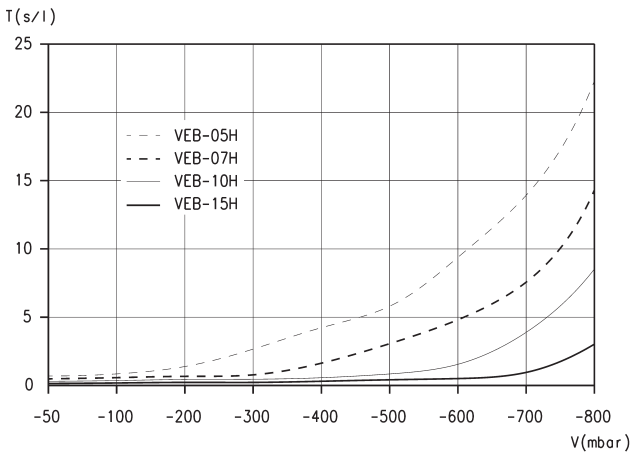

LEGEND:
V = vacuum values
P = working pressure

Note: vacuum reachable with different supply pressures

LEGEND:
T = Evacuation time
V = Vacuum values

Note: evacuation time for different vacuum values

Diagrams VEB

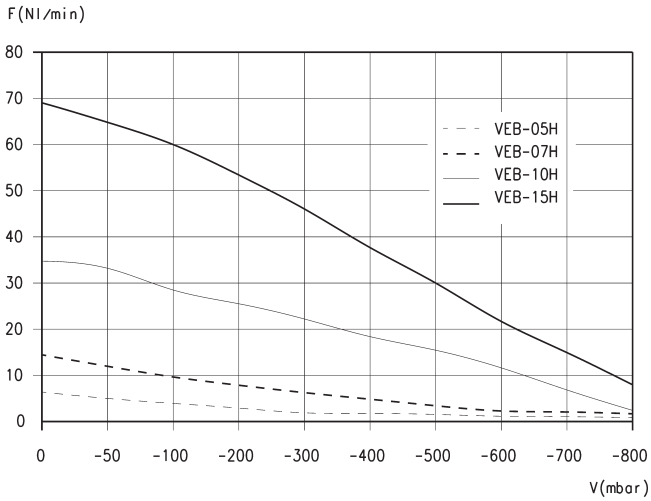

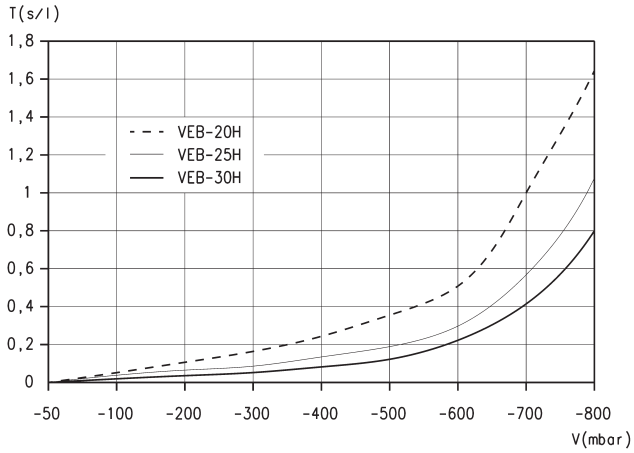

LEGEND:
F = Suction rate
V = Vacuum values

Note: Suction rate with different vacuum values

LEGEND:
T = Evacuation time
V = Vacuum values

Note: evacuation time for different vacuum values

Diagrams VEB

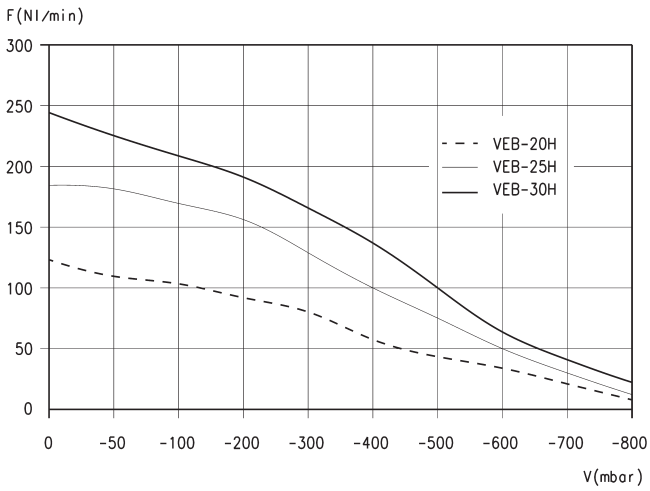

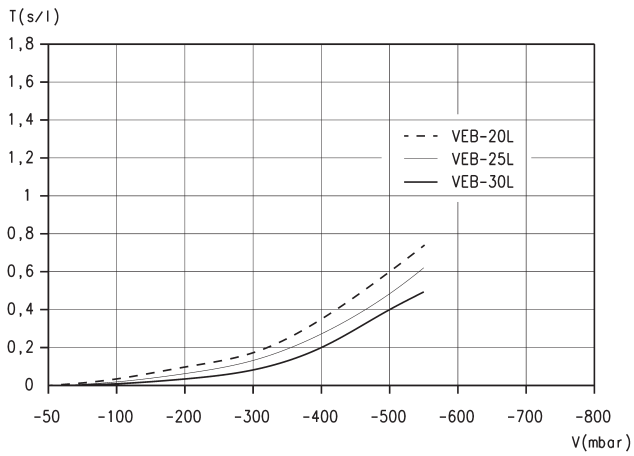

LEGEND:
F = Suction rate
V = Vacuum values

Note: Suction rate with different vacuum values

LEGEND:
T = Evacuation time
V = Vacuum values

Note: evacuation time for different vacuum values

Diagrams VEB

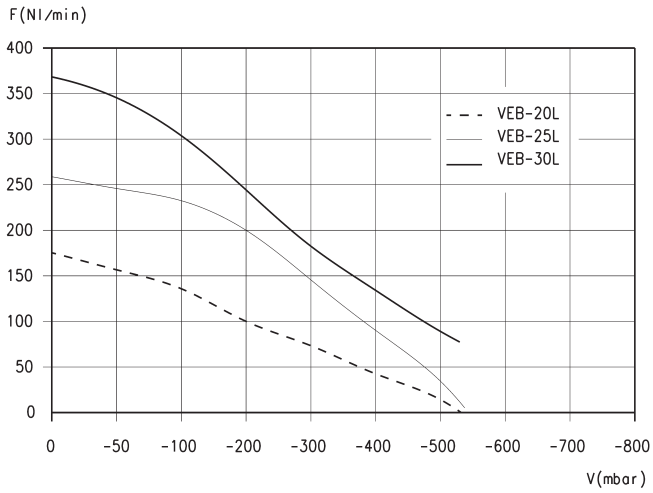

LEGEND:
F = Suction rate
V = Vacuum values

Note: Suction rate with different vacuum values

EJECTORS VEB 05...30

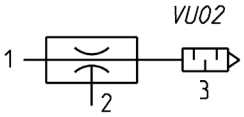

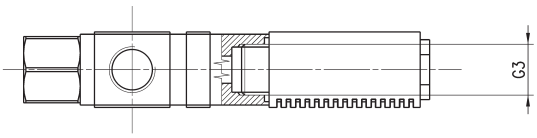

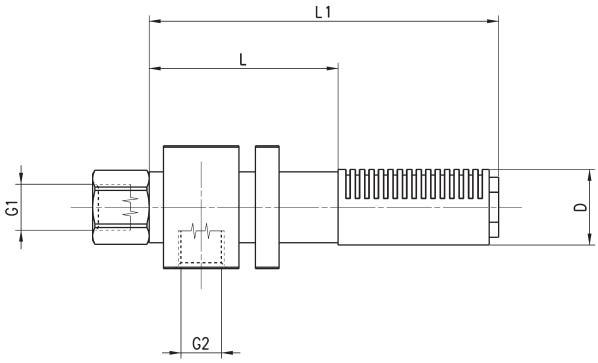

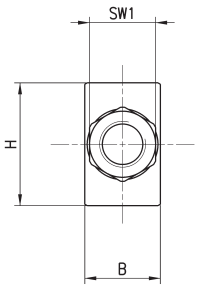

DIMENSIONS									
Mod.	B	D	G1	G2	G3*	H	L	L1	SW1
VEB-05H	10	7	M5	M5	M5	20	32	50	8
VEB-07H	16	16	G1/8	G1/8	G1/8	26	40	74	14
VEB-10H	16	16	G1/8	G1/8	G1/8	26	45	79	14
VEB-15H	22	21	G1/4	G1/4	G1/4	38	60	101,5	17
VEB-20H	26	25	G1/4	G1/4	G3/8	38	75	125,5	17
VEB-20L	26	25	G1/4	G1/4	G3/8	38	75	125,5	17
VEB-25H	32	30	G3/8	G1/2	G1/2	50	100	161,5	22
VEB-25L	32	30	G3/8	G1/2	G1/2	50	100	161,5	22
VEB-30H	42	40	G3/8	G1/2	G3/4	50	110	194,5	22
VEB-30L	42	40	G3/8	G1/2	G3/4	50	110	194,5	22

Series VEBL basic ejectors

Basic ejectors in technopolymer without moving parts, based on the Venturi principle.
Different sizes available, with internal nozzle from 0,5 to 2,5 mm and with suction rate from 8 to 207 l/min.

- No moving parts for long life and low maintenance
- Reduced weight
- Rapid generation of vacuum
- Easy installation, on proper support too
- Optimized dimensions

Series VEBL basic ejectors are universal ejectors made in technopolymer suitable for several industrial applications such as:
- Industrial robotics in most sectors
- Wood industry
- Packaging industry
- Food industry

GENERAL DATA

Description	Basic ejector
Materials	- body in technopolymer - silencier in technopolymer - internal nozzle in brass

CODING EXAMPLE

VE	BL	-	10H	-	T2

VE	SERIES: VE = Vacuum ejector
BL	VERSION: BL = basic light
10H	NOZZLE DIAMETER: 05H = 0,5 mm 07H = 0,7 mm 10H = 1 mm 15H = 1,5 mm 20H = 2 mm 25H = 2,5 mm
T2	TYPE OF CONNECTION (ON SUPPLY SIDE): T1 = plier - tube Ø4 T2 = plier - tube Ø6 T3 = plier - tube Ø8

TECHNICAL DATA

1 = Compressed air inlet
2 = Vacuum inlet
3 = Exhaust

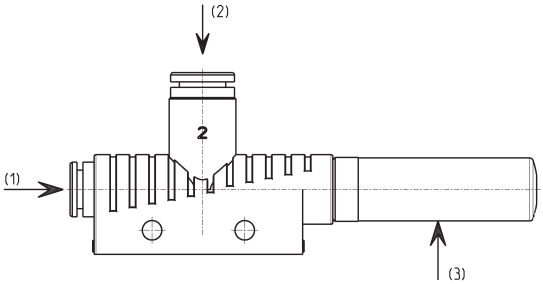

Usable fluids: compressed air, olied and not, according to ISO 8573-1:2001 class 7-4-4

TECHNICAL DATA

Mod.	Ø nozzle (mm)	Obtainable relative pressure (mbar)	Vacuum flow (l/min)	Air consumption (l/min)	Operating pressure (bar)	Optimum operating pressure (bar)	Operating temperature (bar)	Weight (kg)	Noise level gripped [dB(A)]	Noise level free [dB(A)]	Suggested internal Ø for tubes [mm] up to 2m	Max n° of ejectors for one support
VEBL-05H-T1	0,5	-840	8	13,5	3...6	4,5	0...60	0,0075	53	58	2/2	11
VEBL-07H-T1	0,7	-850	16	22	3...6	4,5	0...60	0,0075	59	65	2/2	11
VEBL-10H-T2	1	-850	38	48	3...6	4,5	0...60	0,022	59	65	4/6	7
VEBL-15H-T2	1,5	-850	71	105	3...6	4,5	0...60	0,022	65	72	4/6	7
VEBL-20H-T3	2	-850	127	197	3...6	4,5	0...60	0,050	68	77	6/8	5
VEBL-25H-T3	2,5	-850	215	311	3...6	4,5	0...60	0,050	70	78	6/8	5

Diagrams VEBL

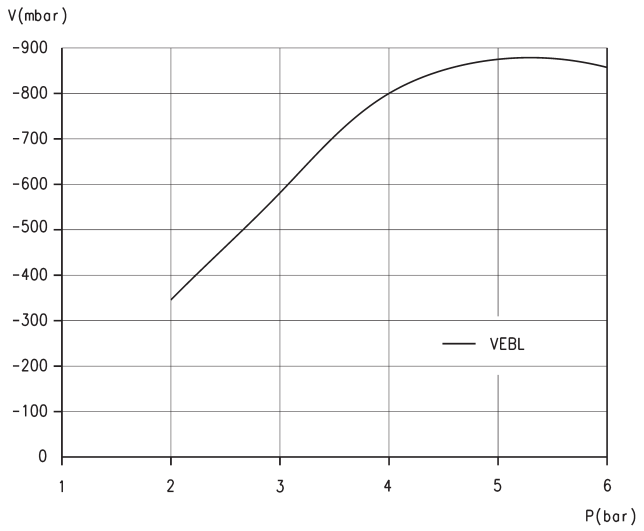

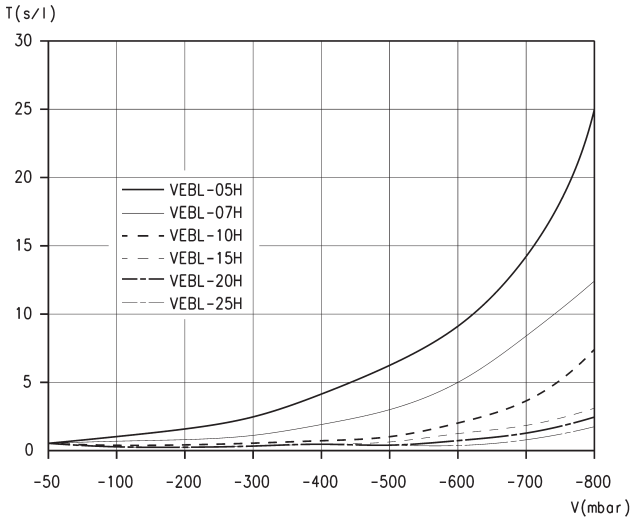

LEGEND:
V = Vacuum values
P = Working pressure

Note: vacuum reachable with different supply pressures

LEGEND:
T = Evacuation time
V = Vacuum values

Note: evacuation time for different vacuum values

Diagrams VEBL

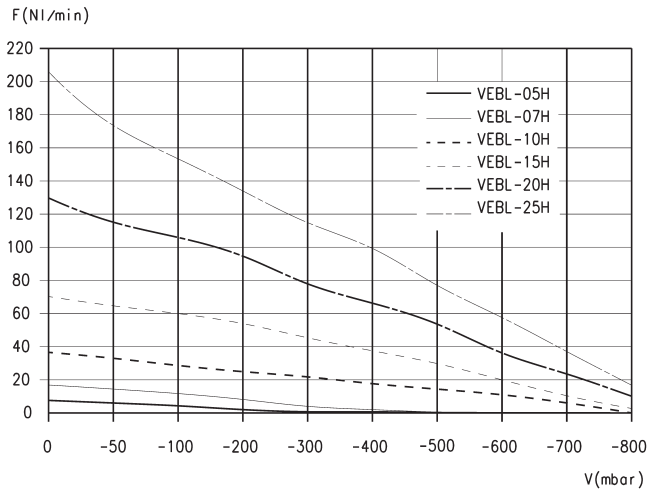

LEGEND:
F = Suction rate
V = Vacuum values

Note: Suction rate with different vacuum values

Ejectors VEBL-05H...25H

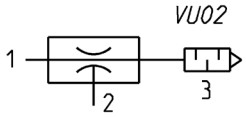

[P] = Pressure
[V] = Vacuum
[R] = Exhaust

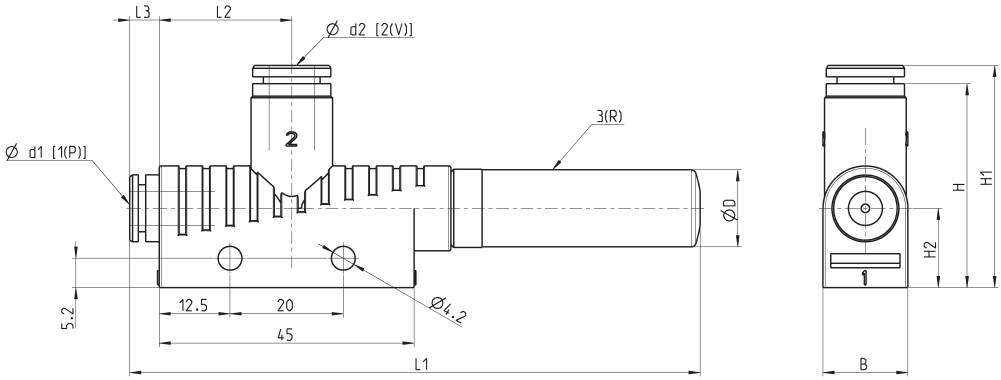

DIMENSIONS										
Mod.	B	d1	d2	D	H	H1	H2	L1	L2	L3
VEBL-05H-T1	10	4	4	9	26	28	12	71	18	2
VEBL-07H-T1	10	4	4	9	26	28	12	71	18	2
VEBL-10H-T2	15	6	8	14	34	40	14	97	22	5,5
VEBL-15H-T2	15	6	8	14	34	40	14	97	22	5,5
VEBL-20H-T3	20	8	10	20	39	45,5	17	168	24,5	5,5
VEBL-25H-T3	20	8	10	20	39	45,5	17	168	24,5	5,5

Accessories VEBL-ST

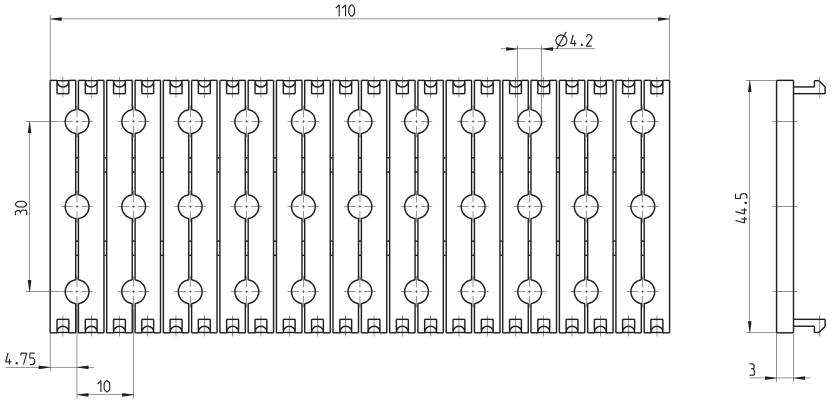

Mod.
VEBL-ST

Accessories VEBL-PCF

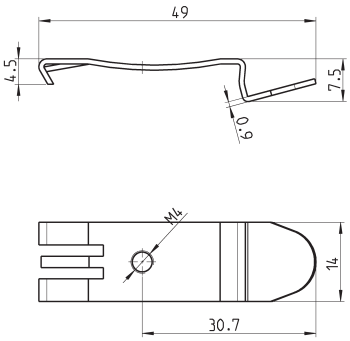

Mod.
VEBL-PCF

Series VED inline ejectors

Vacuum ejectors without moving parts, based on the Venturi principle, used for direct installation on suction pads.

- No moving parts for long life and maintenance
- Easy and fast installation directly at the gripping point
- Reduced dimensions and weight

These ejectors are used for direct installation inline between the suction pad compressed air supply.
This substantially reduces the volume to be evacuated and allows therefore shorter cycle times.

GENERAL DATA

Description	- body in anodized Aluminium - internal nozzle in brass

CODING EXAMPLE

VE	D	-	07

VE	SERIES VE = Vacuum ejectors
D	VERSION D = in-line
07	NOZZLE DIAMETER 07 = 0,7 mm 09 = 0,9 mm

TECHNICAL DATA

1 = Compressed Air Inlet
2 = Vacuum Inlet
3 = Exhaust

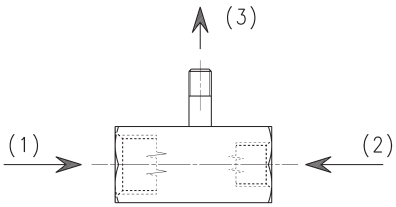

TECHNICAL DATA

Mod.	Ø nozzle (mm)	Degree of evacuation (%)	Suction rate max. (l/min)	Suction rate max. (m^3/h)	Air consumption (l/min)	Air consumption (m^3/h)	Optimum supply pressure (bar)	Weight (kg)
VED-07	0,7	90	14	0,8	21	1,3	5	0,015
VED-09	0,9	89	21	1,3	36	2,2	5	0,015

Diagrams VED

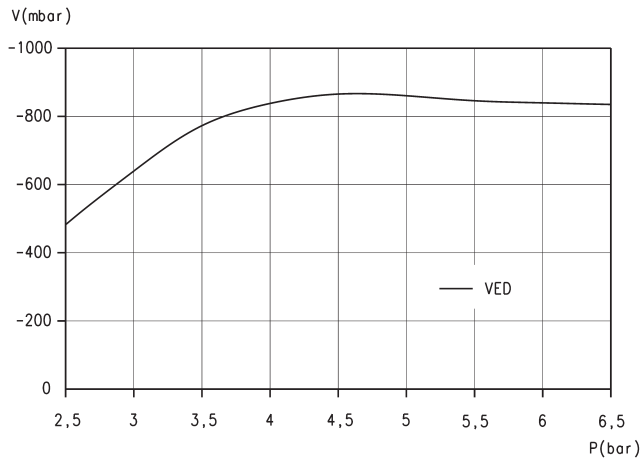

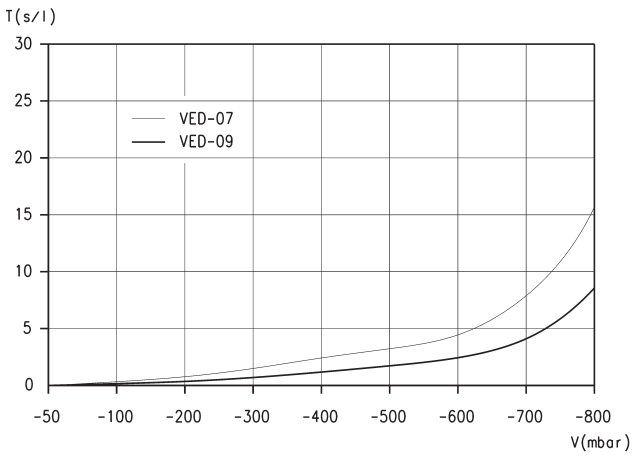

LEGEND:
V = Vacuum values
P = Working pressure

Note: vacuum reachable with different supply pressures

LEGEND:
T = Evacuation time
V = Vacuum values

Note: evacuation time for different vacuum values

Diagrams VED

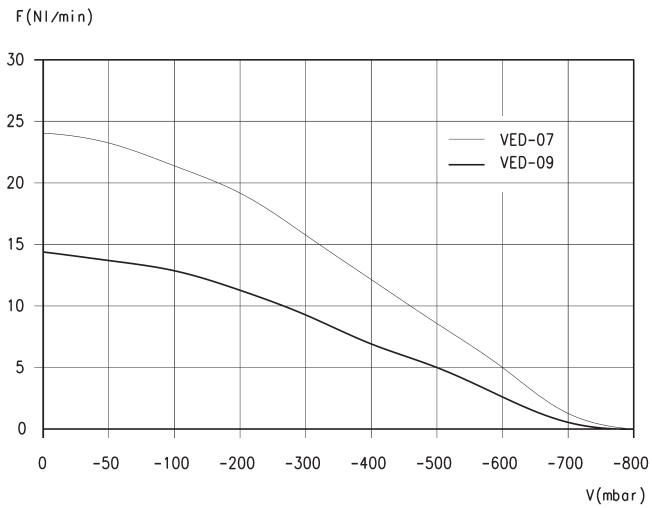

LEGEND:
F = Suction rate
V = Vacuum values

Note: Suction rate with different vacuum values

EJECTOR VED 07 and 09

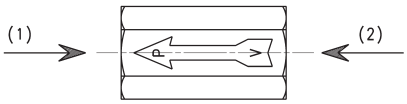

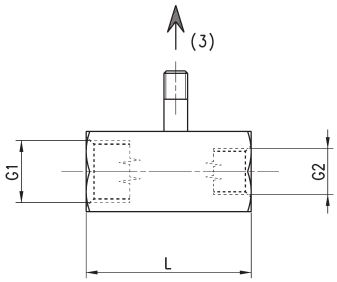

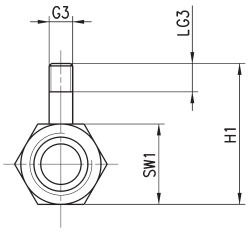

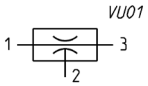

DIMENSIONS							
Mod.	G1	G2	G3*	H1	L	LG3	SW1
VED-07	G1/4	G1/8	M5	29,8	35	5	17
VED-09	G1/4	G1/8	M5	29,8	35	5	17

Series VEDL inline ejectors

Vacuum compact ejectors in technopolymer without moving parts, based on the Venturi principle, used for direct installation on suction pads. Available in two sizes with internal nozzle of 0,5 and 0,7 mm and with suction rate from 8 to 16 l/min.

- No moving parts for long life and maintenance
- Easy and fast installation directly at the gripping point
- Optimized dimensions
- Reduced weight, 5 g only, ideal for dynamic applications
- Low air consumption

Generally, these vacuum compact ejectors are used for direct installation inline between the suction pad and compressed air supply.
This substantially reduces the volume to be evacuated and allows therefore shorter cycle times.

GENERAL DATA

Description	Inline ejectors
Materials	- body in technopolymer - internal nozzle in brass

CODING EXAMPLE

VE	DL	-	05	-	T1

VE	SERIES: VE = Vacuum ejector
DL	VERSION: DL = inline light
05	NOZZLE DIAMETER: 05 = 0,5 mm 07 = 0,7 mm
T1	TYPE OF CONNECTION (ON SUPPLY SIDE): T1 = plier - tube Ø4

TECHNICAL DATA

1 = Compressed air inlet
2 = Vacuum inlet
3 = Exhaust

Usable fluids: compressed air, oiled and not, according to ISO 8573-1:2001 class 7-4-4

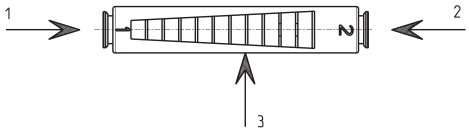

TECHNICAL DATA

Mod.	Ø nozzle (mm)	Obtainable relative pressure (mbar)	Vacuum flow (l/min)	Air consumption [l/min]	Operating pressure	Optimum operating pressure (bar)	Operating temperature (°C)	Weight (kg)	Noise level gripped [dB(A)]	Noise level free [dB(A)]	Suggested internal Ø for tubes (mm) up to 2 m
VEDL-05-T1	0,5	-830	8	13	3...6	4,5	0...60	0,005	52	60	2/2
VEDL-07-T1	0,7	-850	15	25	3...6	4,5	0...60	0,005	55	63	2/2

Diagrams VEDL

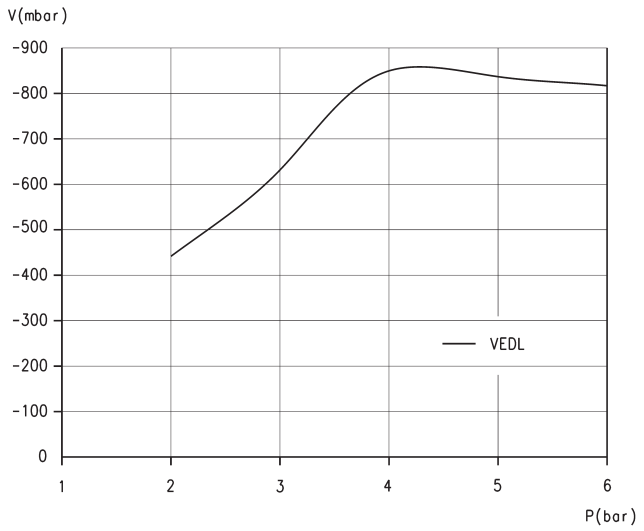

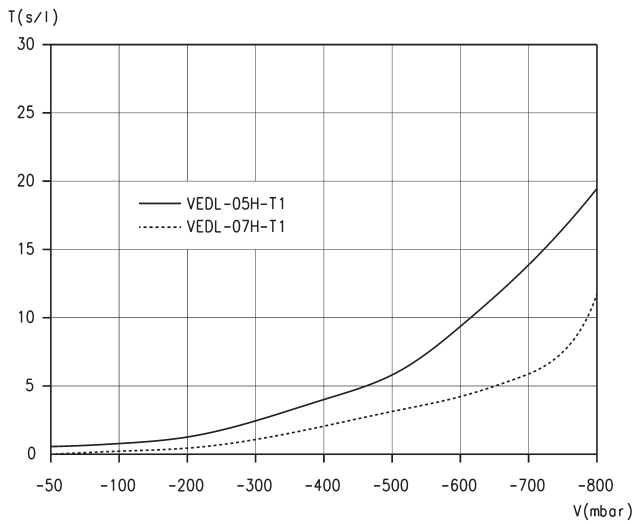

LEGEND:
V = Vacuum values
P = Working pressure

Note: Vacuum reachable with different supply pressures

LEGEND:
T = Evacuation time
V = Vacuum values

Note: Evacuation time for different vacuum values

Diagrams VEDL

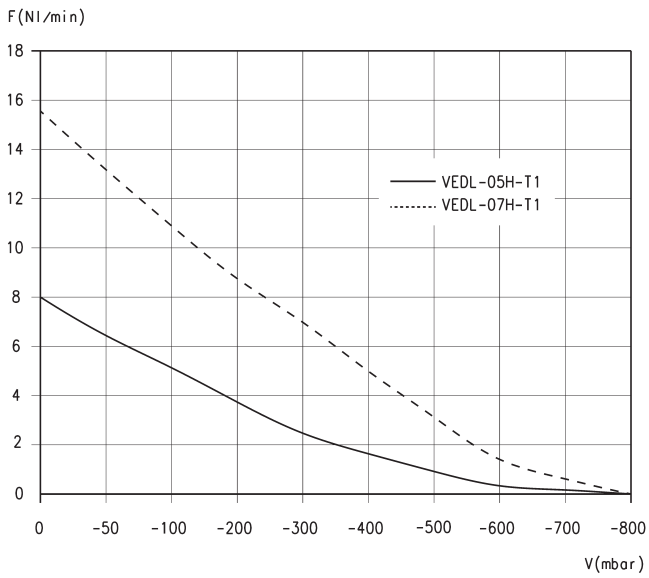

LEGEND:
F = Suction rate
V = Vacuum values

Note: Suction rate with different vacuum values

Inline ejector VEDL

[P] = Pressure
[V] = Vacuum
[R] = Exhaust

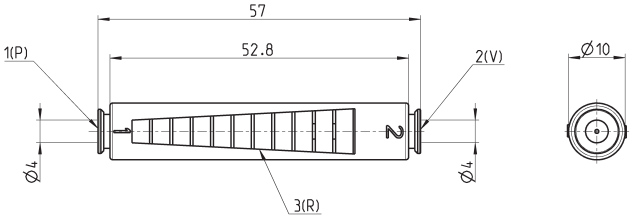

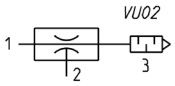

Mod.
VEDL-05-T1
VEDL-07-T1

Series VEC compact ejectors

Vacuum generators with integrated valves and monitoring system. Possibility to command suction and blow-off individually without using external valves.

- Wide range of nozzle sizes, covering a great number of applications.
- Modularity for easy installation
- Available with automatic air saving system (optional) for reduced operations costs.
- Easy monitoring of the vacuum level through integrated vacuum switch (available with or without digital display).

Vacuum generators with integrated suction and blow-off valves, as well as a monitoring system (vacuum switch). Series VEC compact ejectors allow to control suction and blow-off individually without using external valves.

Versions with integrated air saving functions are available on request. These ejectors are particularly suitable for usein automatic handling systems.

GENERAL DATA

Description	- body in anodized aluminium - valve function for the suction available in normally open (NO) or normally closed (NC) version - blow-off valve (NC), integrated silencer and non-return valve
Options	- mechanic/electronic vacuum switch - automatic air-saving system - mounting fitting plate for the battery mounting

CODING EXAMPLE

VE	C	-	10	C	2	-	RD

VE	SERIES VE = Vacuum ejector
C	VERSION C = compact
10	NOZZLE DIAMETER (MM) 10 = 1,0 mm 15 = 1,5 mm 20 = 2,0 mm 25 = 2,5 mm
C	VALVE FUNCTION C = NC (suction OFF when not activated) A = NO (suction ON when not activated)
2	VERSION 2 = with Blow-off valve
RD	VERSION * RD = with air saving system and digital vacuum switch (with display). It is supplied complete with connectors and cables. * RE = with air saving system and electronic vacuum switch. It is supplied complete with connectors and cables. VD = without air saving system, digital vacuum switch (with display) VE = without air saving system, with electronic vacuum switch

* The air saving circuit, where used, switches the suction signal to "ON" apart from the fact that the jector is NC or NO; this means that, in order to swtch the internal loop back to "OFF", it is necessary to activate the signal on the coil controlling it (green cable).

TECHNICAL DATA

EJECTOR SYSTEM:
1 = Suction valve
2 = Blow-off valve
3 = Vacuum switch
4 = Vacuum inlet
5 = Filter
6 = Silencer
7 = Body
8 = Compressed air inlet

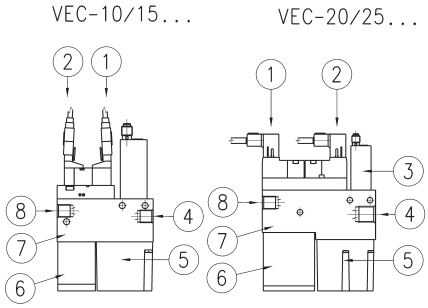

TECHNICAL DATA

Mod.	Nozzle Ø (mm)	Degree of evacuation (%)	Suction rate max. (l/min)	Suction rate max. (m³/h)	Air consumption (l/min)	Air consumption (m³/h)	Air cons. blow-off (l/min)	Noise level workp. gripped [db(A)]	Noise level free [db(A)]	Optimum working pressure (bar)	Weight (kg)	Temperature range
VEC-10	1	85	37	2,2	53	3,2	200	66	68	5	0,275	0 / 45°C
VEC-15	1,5	85	65	3,9	117	7	200	68	68	5	0,275	0 / 45°C
VEC-20	2	85	116	7	190	11,4	200	76	78	5 - 6	0,465	0 / 45°C
VEC-25	2,5	85	161	9,7	310	18,6	200	72	82	5 - 6	0,465	0 / 45°C

Air-saving system

When gripping an object, the ejector remains active until a preset vacuum value is reached. Once reached the preset vacuum value, the ejector is shut OFF. If the vacuum level drops below the preset limit value, the ejector is re-activated by the electronic control circuit until the preset vacuum value is reached again.

Note: VEC ejectors with air-saving system are delivered complete with connectors and cables.

Mod.	
VEC-10/15-A	A = version Normally Open
VEC-10/15-C	C = version Normally Closed
VEC-20/25-A	A = version Normally Open
VEC-20/25-C	C = version Normally Closed

The air saving circuit, where used, switches the suction signal to "ON" apart from the fact that the jector is NC or NO; this means that, in order to swtch the internal loop back to "OFF", it is necessary to activate the signal on the coil controlling it (green cable).

Applications example

- * Evacuation time = time necessary for the ejector to reach a vacuum level of -600 mbar
- ** Air consumption l/cycle = (105/60) x 5 (105 / 60) x 0,05
- *** Prod. cycles/day = 8 hours x 3600 s = 28.800/20 s per cycle = 1440 cycles x 2 shifts = 2880 cycles

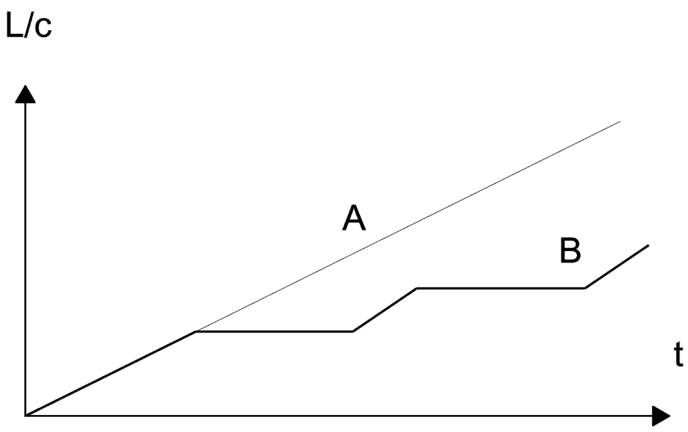

Operating conditions	without air-saving "A"	With air-saving "B"
Model	VEC-15C2-VE	VEC-15C2-RE
Air consumption l/min	105	105
Transport time (sec.)	5	5
Evac. time to -600 mbar (sec.)*	0,05	0,05
Total time vacuum ON (sec.)	5	0,05
Air consumption (l/cycle)**	8,8	0,087
Cycle time (sec.)	20	20
Prod. cycles/day (2-shifts)***	2880	2880
Daily air consumption (l)	25.361	250

In this example the air-saving system saves around 99% of the air.

DIAGRAMS VEC

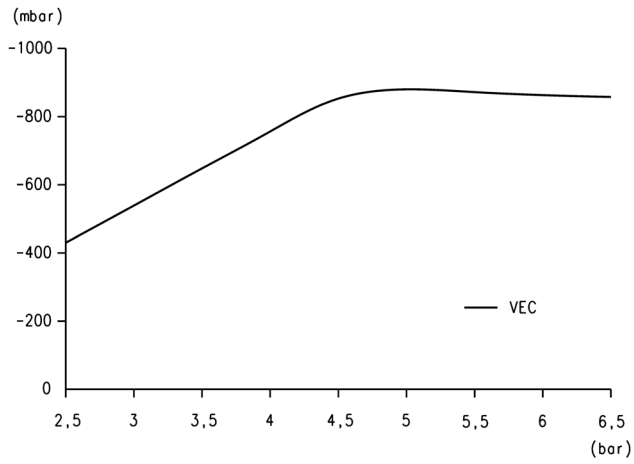

Achievable vacuum at different supply pressures

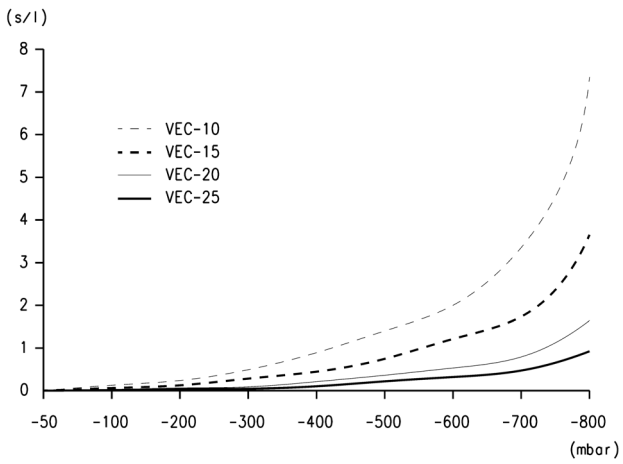

Evacuation time for different vacuum values

DIAGRAMS VEC

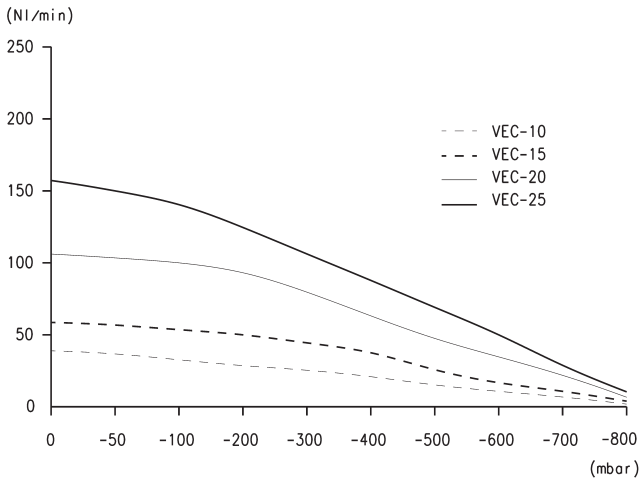

Suction rate for different vacuum values

Normally Closed valve functions

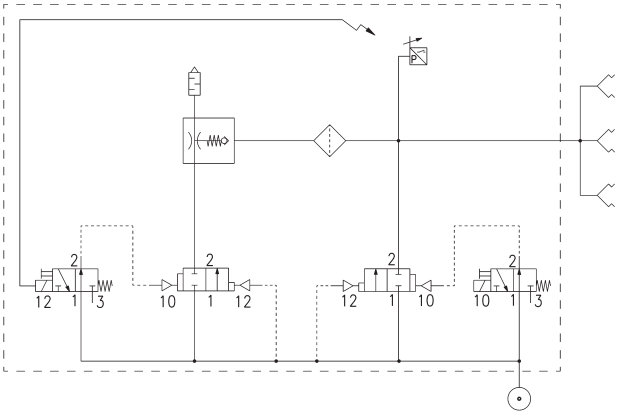

VEC-..C2-RD - VEC-..C2-RE

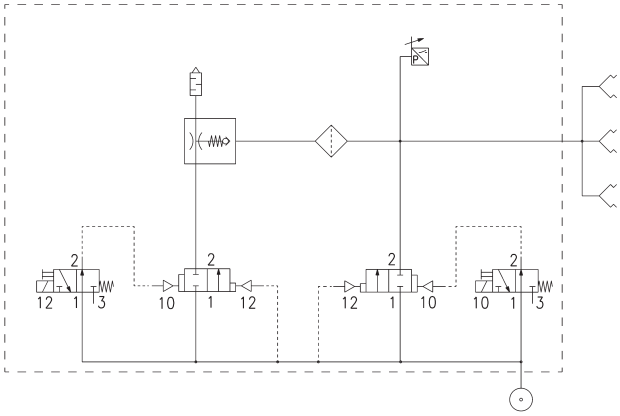

VEC-..C2-VD - VEC-..C2-VE

Normally Open valve functions

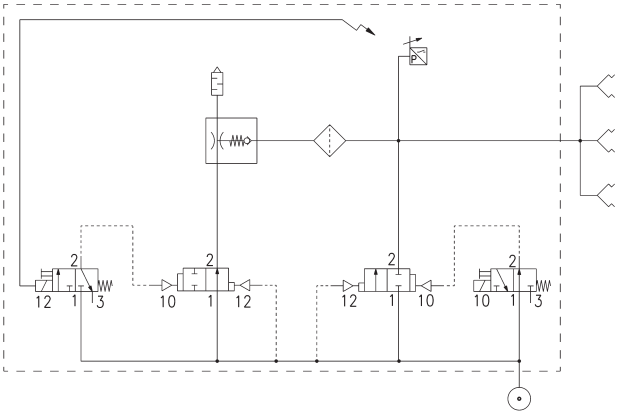

VEC-..A2-RD - VEC-..A2-RE

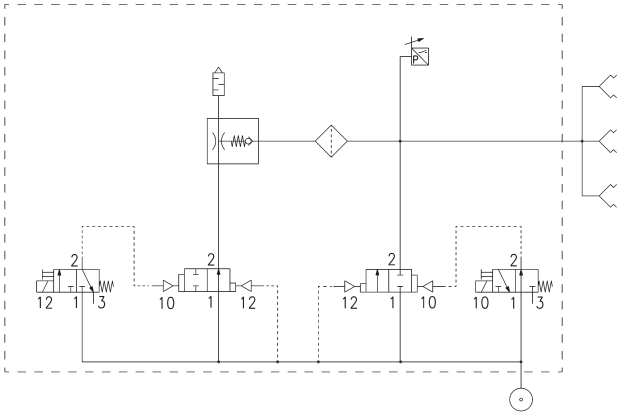

VEC-..A2-VD - VEC-..A2-VE

EJECTORS VEC 10 - 15 - 20 - 25

....D = SWD-V00-PA
Electronic digital display; 2 digital outputs

...E = SWE-V00-PA
Electronic without digital display; 1 digital output and 1 analog output.

VEC-10/15...

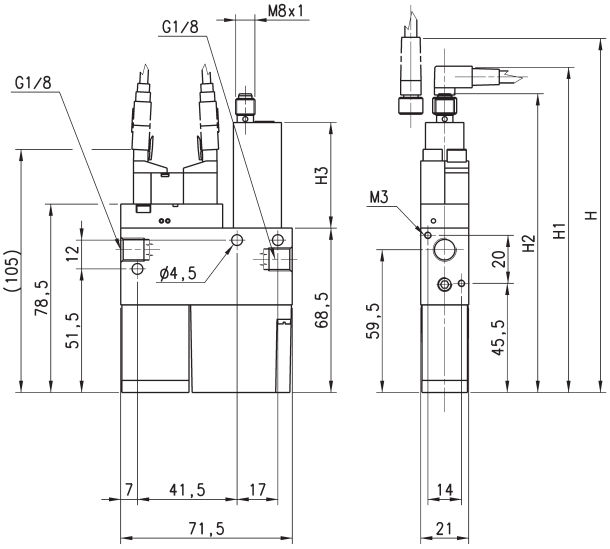

VEC-20/25...

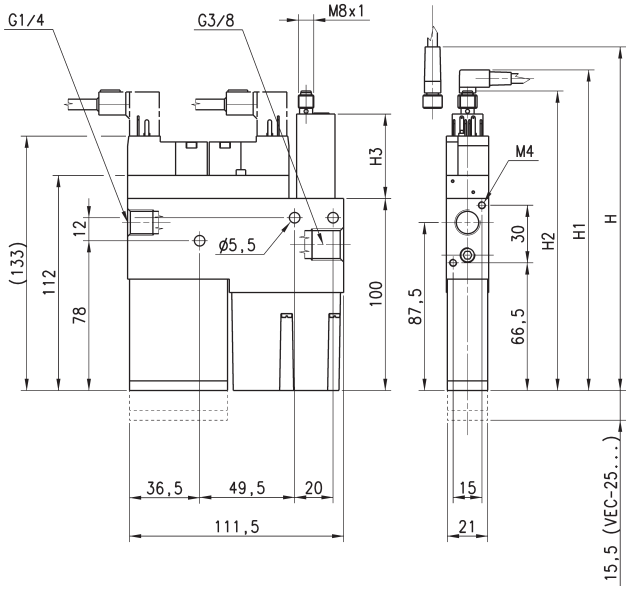

DIMENSIONS						
Mod. [D]	Mod. [E]	R = With air saving	H	H1	H2	H3
VEC-10...-RD	VEC-10...-RE	R	162	150	139	58,5
VEC-15...-RD	VEC-15...-RE	R	162	150	139	58,5
VEC-20...-RD	VEC-20...-RE	R	195,5	183,5	172,5	58,5
VEC-25...-RD	VEC-25...-RE	R	195,5	183,5	172,5	58,5
VEC-10...-VD	VEC-10...-VE	-	147,5	135,5	124,5	44
VEC-15...-VD	VEC-15...-VE	-	147,5	135,5	124,5	44
VEC-20...-VD	VEC-20...-VE	-	181	169	158	44
VEC-25...-VD	VEC-25...-VE	-	181	169	158	44

Connector Mod. 121-8.. for Mod. VEC-10 and VEC-15

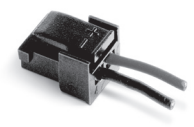

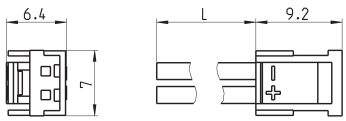

Mod.	description	colour	L = cable length (mm)	cable holding
121-803	crimped cable	black	300	crimping
121-806	crimped cable	black	600	crimping
121-810	crimped cable	black	1000	crimping
121-830	crimped cable	black	3000	crimping

Connector Mod. 126-... DIN 43650 pin spacing 8 mm

For Mod. VEC-20 and VEC-25

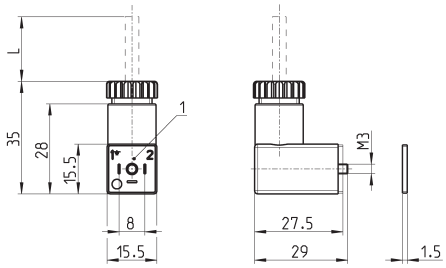

Mod.	description	colour	working voltage	cable length [L]	cable holding	tightening torque
126-550-1	moulded cable, without electronics	black	-	1000 mm	-	0.3 Nm
126-800	connector, without electronics	black	-	-	PG7	0.3 Nm
126-701	connector, varistor + Led	transparent	24 V AC/DC	-	PG7	0.3 Nm

1 = 90° adjustable connector

Circular M8 4-pole connectors, Female

With PU sheathing, non shielded cable.
Protection class: IP65

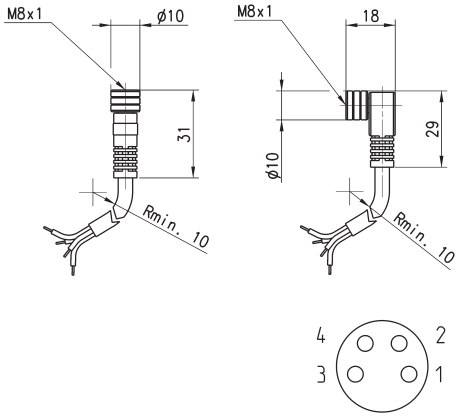

Mod.	Type of connector	Cable length (m)
CS-DF04EG-E200	straight	2
CS-DF04EG-E500	straight	5
CS-DR04EG-E200	90°	2
CS-DR04EG-E500	90°	5

Series VEM compact ejectors

Miniaturized vacuum generators with integrated valves and monitoring system. Possibility to command suction and blow-off individually without using external valves.

- Extremely compact with further reduced weight.
- Modularity for easy installation.
- Easy monitoring of the vacuum level through integrated vacuum switch.

One of the most important features of Series VEM compact ejector is the extreme compactness.
This compactness and low weight makes them suitable for "dynamic" applications such as robots, when assembled directly on the part in motion (gripper head etc.)

The Compact ejector Series VEM have integrated suction-and blow off individually without using external valves.
With these it is therefore possible to command suction and blow-off individually without using external valves.
The compact ejectors Series VEM are often used in completely automatic handling systems.

GENERAL DATA

Description	- body in anodized Aluminium - valve function for the suction available in normally open (NO) or normally closed (NC) version - blow-off valve (NC), integrated silencer and filter
Options	possibility of mounting fitting plate

CODING EXAMPLE

VE	M	-	05	C	2	-	VE

VE	SERIES VE = Vacuum ejector
M	VERSION M = compact, mini
05	NOZZLE DIAMETER 05 = 0,5 mm 07 = 0,7 mm 10 = 1,0 mm
C	VALVE FUNCTION C = NC (suction OFF when not activated) A = NO (suction ON when not activated)
2	VERSION 2 = with Blow-off valve
VE	VALVE TYPE VE = without air saving system, with electronic vacuum switch

TECHNICAL DATA

EJECTOR SYSTEM:
1 = Suction valve
2 = Blow-off valve
3 = Vacuum switch
4 = Vacuum inlet
5 = Filter
6 = Silencer
7 = Body
8 = Compressed air inlet

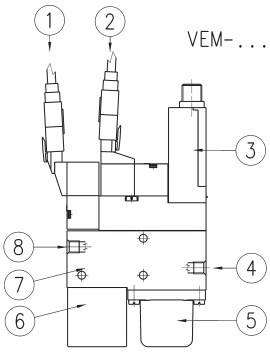

TECHNICAL DATA

Mod.	Ø nozzle (mm)	Degree of evacuation (%)	Max. Suction rate (l/min)	Max. Suction rate (m^3/h)	Air consumption (l/min)	Air cons. during evac. (m^3/h)	Air cons. during evac. (l/min)	Noise level workp. gripped [db(A)]	Noise level free [db(A)]	Optimum operating pressure (bar)	Weight (kg)	Temperature range
VEM-05	0,5	85	6	0,4	13	0,8	26	62	62	4,5	0,08	0 / 45°C
VEM-07	0,7	85	12	0,7	21	1,3	26	67	70	4,5	0,08	0 / 45°C
VEM-10	1	85	23	1,4	46	2,8	26	73	76	4,5	0,08	0 / 45°C

DIAGRAMS VEM

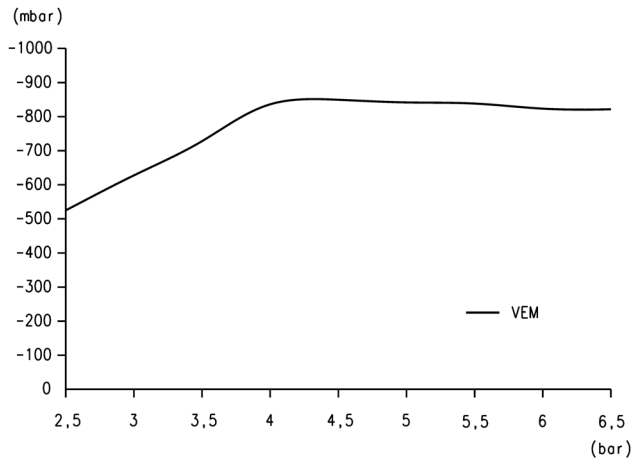

Achievable vacuum at different operating pressures

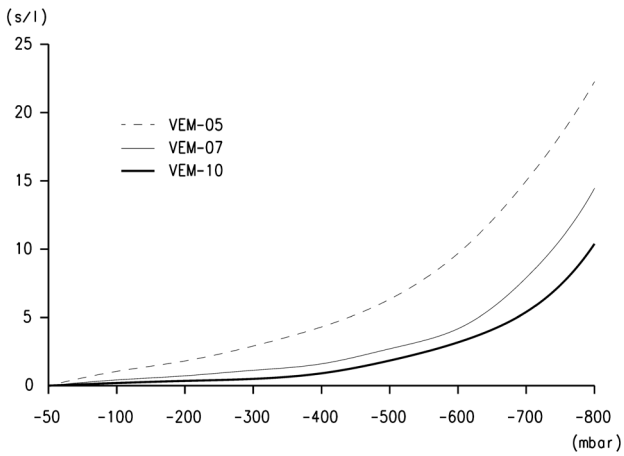

Evacuation time for different vacuum values

DIAGRAMS VEM and EXAMPLES OF PNEUMATIC SCHEME

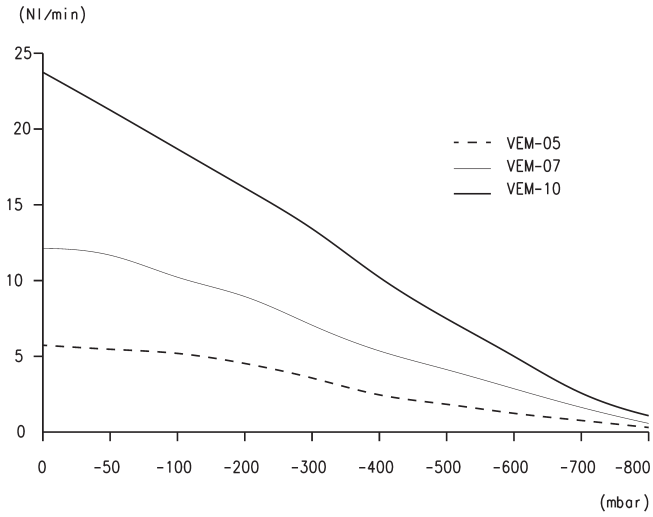

Suction rate for different vacuum values

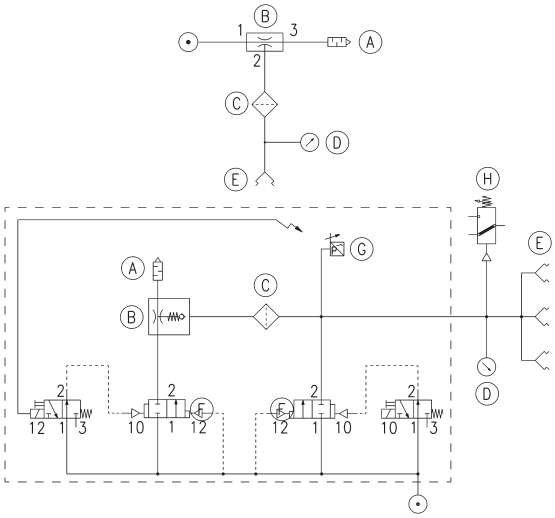

A = Silencer
B = Ejector
C = Vacuum filter
D = Vacuum gauge
E = Suction pad
F = 2/2 valve
G = Adjustable vacuum switch internal signal
H = Adjustable vacuum switch external signal

Series VEM compact ejectors

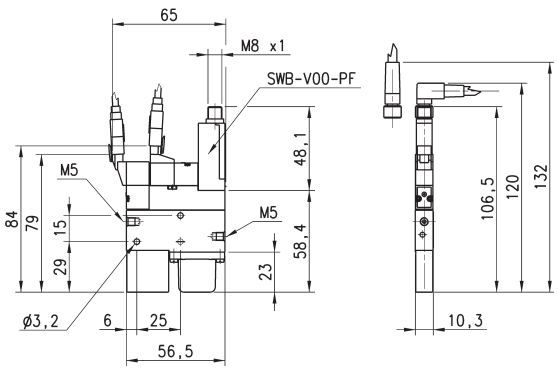

Mod.
VEM-05C2-VE
VEM-05A2-VE
VEM-07C2-VE
VEM-07A2-VE
VEM-10C2-VE
VEM-10A2-VE

Connector Mod. 121-8..

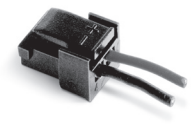

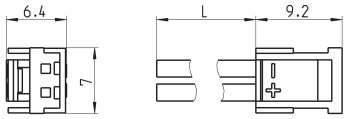

Mod.	description	colour	L = cable length (mm)	cable holding
121-803	crimped cable	black	300	crimping
121-806	crimped cable	black	600	crimping
121-810	crimped cable	black	1000	crimping
121-830	crimped cable	black	3000	crimping

Circular M8 4-pole connectors, Female

Protection class: IP65
Materials: PU non shielded cable

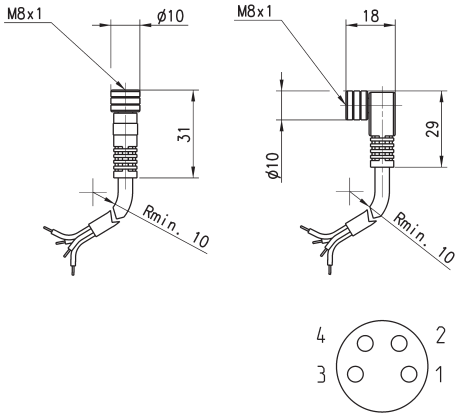

Mod.	Type of connector	Cable length (m)
CS-DF04EG-E200	straight	2
CS-DF04EG-E500	straight	5
CS-DR04EG-E200	90°	2
CS-DR04EG-E500	90°	5

Series NPF
flexible suction pad mountings

The vulcanisation provides flexibility in all directions.
Thread G1/4

- Flexible in all directions for optimal adaption to the workpiece (up to 12°)
- Low pivoting point which reduces the wear on the suction pad.
- Rubber covered (vulcanised) metal connection for heavy loads.

Series NPF flexible suction pad mounting allows a better adaption between the suction pad and the workpiece due to its flexibility in all directions.

Applications:
- Suitable for use in conjunction with larger flat suction pads on bigger workpieces which are either inclined or have a tendency to sag during the lifting operation or simply have a slightly irregular shape.
- They can be used in combination with spring plungers for further compensation in height if needed.

GENERAL DATA

Description	Flexible suction pad mounting
Materials	- Steel body - Vulcanised rubber connection

CODING EXAMPLE

NPF	-	FM	-	1/4	-	M10 X 1,25

NPF	SERIES NPF = Flexible suction pad mountings
FM	THREAD VERSION FM = G1 Female / G2 Male
1/4	FEMALE THREAD G1 1/4 = G1/4
M10x1,25	MALE THREAD G2 M10x1,25 = M10x1,25 1/4 = G1/4

Flexible suction pad mountings Series NPF

* G1 = Female thread (F)
** G2 = Male thread (M)

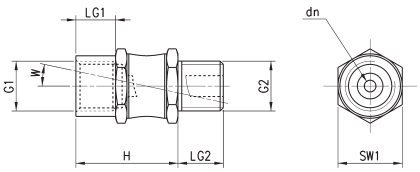

DIMENSIONS

Mod.	dn	G1 *	G2 **	H	LG1	LG2	SW1	W(°)	Vertical load (N)	Bending moment (Nm)	Weight (g)
NPF-FM-1/4-M10X1,25	2,8	G1/4 F	M10X1,25 M	27	10,5	8	17	12	500	8	26
NPF-FM-1/4-1/4	3	G1/4 F	G1/4 M	27	12	12	17	12	750	10	30

Series NPM and NPR (non rotating) spring plungers

These spring plungers are used in situations where significant height differences of the workpiece have to be compensated for.
Thread size M3, M5, G1/8, G1/4, plunger stroke length from 5 to 75 mm.

- Spring plungers with lower pressure for soft contact on delicate surfaces, and good compensation in height
- Wide range of sizes with diferent stroke lengths covering a wide range of applications
- Non rotating version available

The spring plungers are used in situations where significant height differences of the workpieces have to be compensated for. The spring provides furthermore a gentle approach towards the workpiece without further complex controls in fully automated system, which is important when handling sensitive workpieces.

Applications:
- Handling of parts with different heights (for example curved metal sheets)
- Handling of a very fragile parts (for example glass sheets), or parts with a delicate surface

GENERAL DATA

Description	- spring plunger consisting of a high-strength steel rod - guide sleeve - lower spring - threaded fitting (internal thread for suction pads until M5, otherwise external thread)

CODING EXAMPLE

NPM	-	FM	-	1/4	-	75

NPM	SERIES NPM = spring plunger NPR = spring plunger - non-rotating
FM	THREAD VERSION FM = female / male FF = female / female
1/4	THREAD M3 = M3 M5 = M5 1/8 = G1/8 1/4 = G1/4
75	COMPENSATION STROKE 05 = 5 mm 10 = 10 mm 15 = 15 mm 20 = 20 mm 25 = 25 mm 50 = 50 mm 75 = 75 mm

TECHNICAL DATA

Mod.	Spring force (N/mm)	Spring force in rest position (N)	Spring force at half the stroke length (N)	Plunger stroke length (mm)	Max.vertical static load (N)	Max. horizontal static load (N)	Weight (g)
NPM-FF-M3-05	0,596	1,49	2,98	5	550	47	9
NPM-FF-M5-05	0,508	3,3	4,57	5	1500	132	16
NPM-FF-M5-10	0,323	2,75	4,36	10	1500	97	19
NPM-FF-M5-20	0,209	1,78	3,87	20	1500	63	25
NPM-FM-1/8-15	0,221	3,53	5,19	15	3700	385	80
NPM-FM-1/8-25	0,143	3,57	5,36	25	3700	283	90
NPM-FM-1/8-50	0,097	2,92	5,34	50	3700	173	110
NPM-FM-1/4-25	0,711	6,47	15,36	25	2400	747	145
NPM-FM-1/4-50	0,452	1,4	12,7	50	2400	466	175
NPM-FM-1/4-75	0,262	5,38	15,2	75	2400	340	190
NPR-FF-M3-05	0,596	1,49	2,98	5	550	47	9
NPR-FF-M5-05	0,508	3,30	4,57	5	1500	132	16
NPR-FF-M5-10	0,323	2,75	4,36	10	1500	97	19
NPR-FF-M5-20	0,209	1,78	3,87	20	1500	63	25
NPR-FM-1/8-15	0,221	3,53	5,19	15	3700	385	80
NPR-FM-1/8-50	0,097	2,92	5,34	50	3700	173	110
NPR-FM-1/4-25	0,711	6,47	15,36	25	2400	747	144
NPR-FM-1/4-75	0,262	5,38	15,20	75	2400	340	202

NPM-NPR Female - Female Version

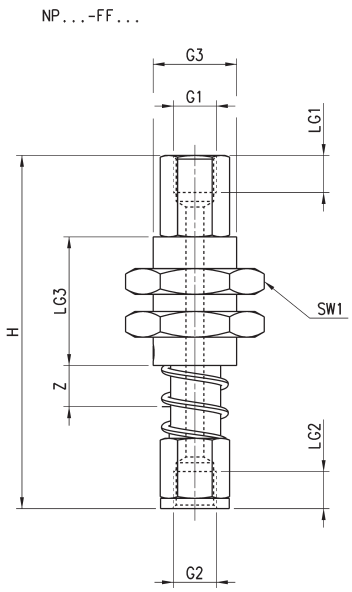

DIMENSIONS									
Mod.	G1	G2	G3	H	LG1	LG2	LG3	SW1	Z
NPM-FF-M3-05	M3F	M3F	M6X0,75	33,5	3,8	6	10	10	5
NPM-FF-M5-05	M5F	M5F	G1/8	41,2	5,5	6,2	15	14	5
NPM-FF-M5-10	M5F	M5F	G1/8	47,2	5,5	6,2	15	14	10
NPM-FF-M5-20	M5F	M5F	G1/8	59,2	5,5	6,2	15	14	20
NPR-FF-M3-05	M3F	M3F	M6X0,75	33,5	3,8	6	10	10	5
NPR-FF-M5-05	M5F	M5F	G1/8	41,2	5,5	6,2	15	14	5
NPR-FF-M5-10	M5F	M5F	G1/8	47,2	5,5	6,2	15	14	10
NPR-FF-M5-20	M5F	M5F	G1/8	59,2	5,5	6,2	15	14	20

NPM-NPR Female - Male Version

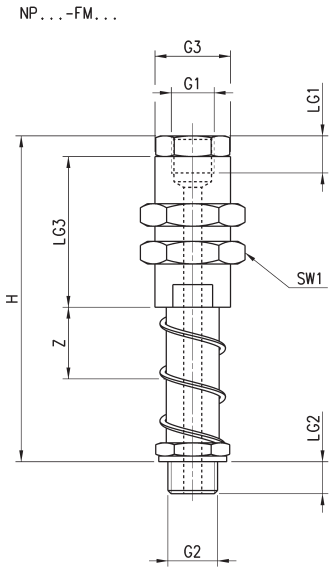

DIMENSIONS									
Mod.	G1	G2	G3	H	LG1	LG2	LG3	SW1	Z
NPM-FM-1/8-15	G1/8	G1/8 M	M16X1	80	8	6,5	30	22	15
NPM-FM-1/8-25	G1/8	G1/8 M	M16X1	93	8	6,5	30	22	25
NPM-FM-1/8-50	G1/8	G1/8 M	M16X1	124	8	6,5	30	22	50
NPM-FM-1/4-25	G1/8	G1/4 M	M20X1,5	95	13	8,5	40	24	25
NPM-FM-1/4-50	G1/8	G1/4 M	M20X1,5	124,5	13	8,5	40	24	50
NPM-FM-1/4-75	G1/8	G1/4 M	M20X1,5	154	13	8,5	40	24	75
NPR-FM-1/8-15	G1/8	G1/8 M	M16X1	80	8	6,5	30	22	15
NPR-FM-1/8-50	G1/8	G1/8 M	M16X1	124	8	6,5	30	22	50
NPR-FM-1/4-25	G1/8	G1/4 M	M20X1,5	95	13	8,5	40	24	25
NPR-FM-1/4-75	G1/8	G1/4 M	M20X1,5	154	13	8,5	40	24	75

Series VNV check valves

These check valves are mainly used on vacuum gripper systems containing multiple suction pads in order to shut off individual suction pads which are not covered.
Thread size M5, G1/8, G1/4, G3/8, G1/2.

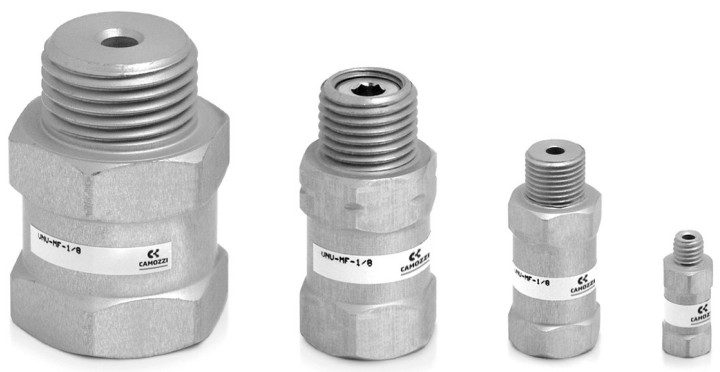

» Enable the de-activation of suction pads not in contact with the workpiece, thus makes it possible to create more versatile "multi use" gripping system.

The check valves Series VNV are mainly used on vacuum gripper systems containing multiple suction pads in order to shut off individual suction pads which are not covered or accidently pulled away from the workpiece. In this way the gripper system can operate correctly maintaining the vacuum level necessary for the application.

Applications:
- Handling objects with different shape and dimensions with the same gripping system

GENERAL DATA

Description	- ball seat valve with fixed bypass function - aluminium body with internal elements in brass - integrated dirt filter

TECHNICAL DATA

Max required suction flow and according different pressures

Mod.	- 0,3 bar (m^3/h)	- 0,3 bar (l/min)	- 0,6 bar (m^3/h)	- 0,6 bar (l/min)	Max flow (m^3/h)	Max flow (l/min)	Weight (g)
VNV-MF-M5	0.12	2	0.22	3.7	2.3	38,3	2.2
VNV-MF-1/8	0.22	3.7	0.43	7.2	15.7	261.7	11.2
VNV-MF-1/4	0.24	4	0.47	7.8	21.9	365	17.5
VNV-MF-3/8	0.44	7.3	0.48	8	35.4	590	30.3
VNV-MF-1/2	0.7	11.7	1.4	23.3	37	616.7	47.4
VNV-FM-1/8	0.22	3.7	0.43	7.2	15.7	261.7	11.2
VNV-FM-1/4	0.24	4	0.47	7.8	21.9	365	17.5
VNV-FM-1/2	0.7	11.7	1.4	23.3	37	616.7	47.4

CODING EXAMPLE

VNV	-	MF	-	M5

VNV	SERIES VNV = Check valve
MF	THREAD VERSION MF= G1 male / G2 female FM = G1 female / G2 male
M5	THREAD M5 = M5 1/8 = G1/8 1/4 = G1/4 3/8 = G3/8 (MF version only) 1/2 = G1/2

VNV from M5 to G1/2, Male - Female thread

Drawing note:
A = air flow direction during suction

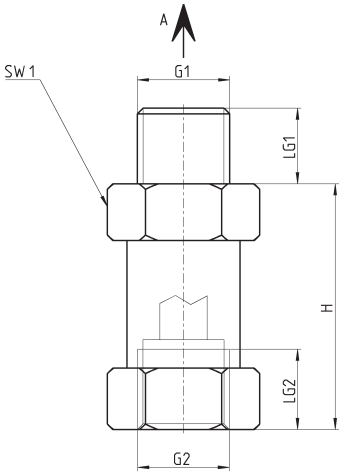

Table note:
* M = Male thread
* F = Female thread

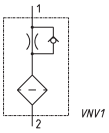

DIMENSIONS						
Mod.	G1*	G2*	H	LG1	LG2	SW1
VNV-MF-M5	M 5 M	M 5 F	15.5	4.5	4.5	8
VNV-MF-1/8	G1/8 M	G1/8 F	26	8.5	8	14
VNV-MF-1/4	G1/4 M	G1/4 F	26	11	10	17
VNV-MF-3/8	G3/8 M	G3/8 F	29	10	12	22
VNV-MF-1/2	G1/2 M	G1/2 F	29	14	12	27

VNV from G1/8 to G1/2 - Female - Male thread

Drawing note:
A = air flow direction during suction

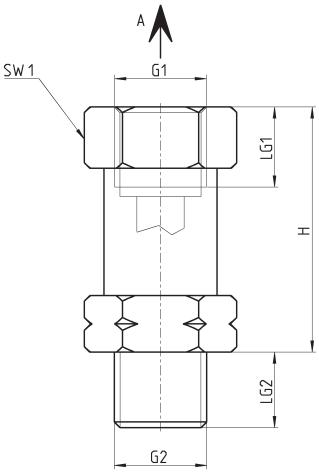

Table note:
* M = Male thread
* F = Female thread

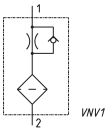

DIMENSIONS						
Mod.	G1*	G2*	H	LG1	LG2	SW1
VNV-FM-1/8	G1/8 F	G1/8 M	26	8	8,5	14
VNV-FM-1/4	G1/4 F	G1/4 M	26	10	11	17
VNV-FM-1/2	G1/2 F	G1/2 M	29	12	14	27

Series FVD inline vacuum filters

For use in vacuum systems with minor to medium levels of dirt.
Direct mounting on the suction pad.

- Hose connection and blocking nut
- Transparent body with an arrow indicating the flow direction
- Replaceable filter element
- Transparent cartridge to check the filter's conditions

These filters can be mounted directly on the suction pad.
The filter element can be easily substituted and its conditions can be checked thanks to its transparent wrapping.

GENERAL DATA

Description	Inline filter
Materials	- body in technopolymer - cloth filter

CODING EXAMPLE

FVD	-	6/4	-	50

FVD	SERIES: FVD = inline filter
6/4	CONNECTIONS: 6/4 = tube 6 8/6 = tube 8
50	FILTER ELEMENT: 50 = 50 µm

TECHNICAL DATA

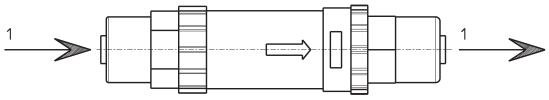

TECHNICAL DATA						
Mod.	Filter element (µm)	Nominal flow (l/min)	Max vacuum (mbar)	Max pressure at 25°C (bar)	Max pressure at 50°C (bar)	Weight (kg)
FVD-6/4-50	50	32	-990	7	5	0,006
FVD-8/6-50	50	66	-990	7	5	0,010

Series FVD inline filter

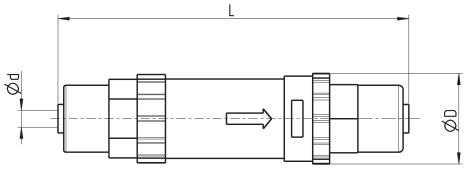

DIMENSIONS			
Mod.	d	D	L
FVD-6/4-50	6	16	61
FVD-8/6-50	8	23	68

Series FVT vacuum cup filters

Used as pre-filters and fine filters for air with varying amounts of contamination, for the protection of the vacuum generator.
Mounted as protection for the ejector.

- Wide range of sizes
- Recycling filter cartridge
- Replaceable filter element
- Transparent filter cup to check the filter's conditions

These filters can be mounted directly under the ejectors to protect them in case of dusty environmental conditions.
The filter element can be substituted very easily and its conditions can be checked thanks to its transparent wrapping.
These filters can be wall-mounted through a proper bracket.
Filtering of vacuum and air up to 7 bar.

GENERAL DATA

Description	Cup filter
Materials	- body in technopolymer - filter in polyethylene (PE)

CODING EXAMPLE

FVT	-	FF	-	1/4	-	80

FVT	SERIES: FVT = cup filter
FF	THREAD SIZE: FF = female-female
1/4	CONNECTIONS: 1/8 = G1/8 1/4 = G1/4 3/8 = G3/8 1/2 = G1/2 3/4 = G3/4
80	FILTER ELEMENT: 80 = 80 µm

TECHNICAL DATA

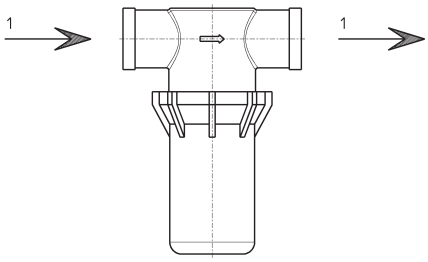

TECHNICAL DATA						
Mod.	Filter element (µm)	Nominal flow (l/min)	Max vacuum (mbar)	Max pressure at 25°C (bar)	Max pressure at 50°C (bar)	Weight (kg)
FVT-FF-1/8-80	80	45	-990	7	5	0,049
FVT-FF-1/4-80	80	110	-990	7	5	0,047
FVT-FF-3/8-80	80	245	-990	7	5	0,079
FVT-FF-1/2-80	80	300	-990	7	5	0,076
FVT-FF-3/4-80	80	600	-990	7	5	0,164

Diagrams FVT

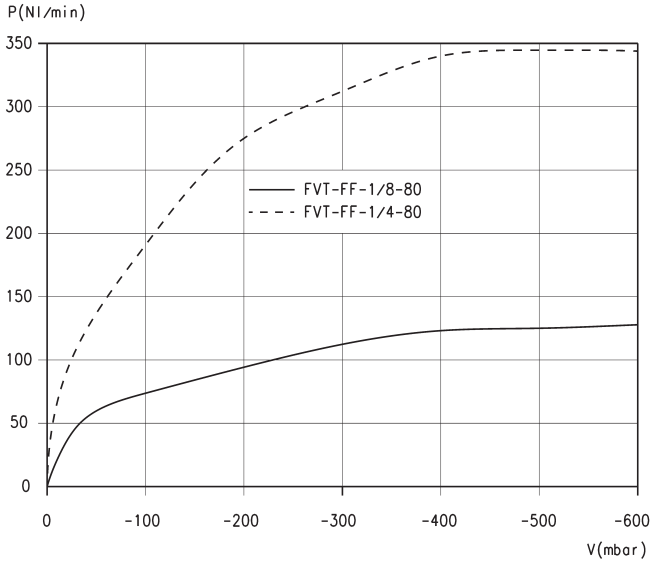

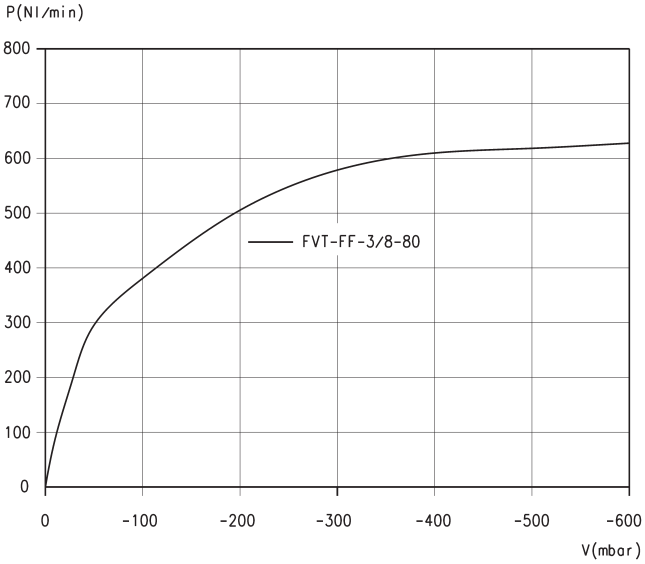

LEGEND:
P = Volumetric flow
V = Vacuum values

Note: Flow rate for different vacuum values

LEGEND:
P = Volumetric flow
V = Vacuum values

Note: Flow rate for different vacuum values

Diagrams FVT

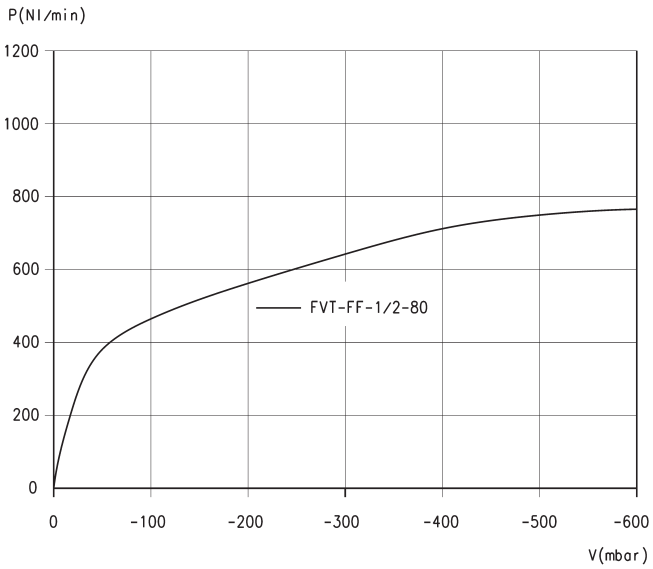

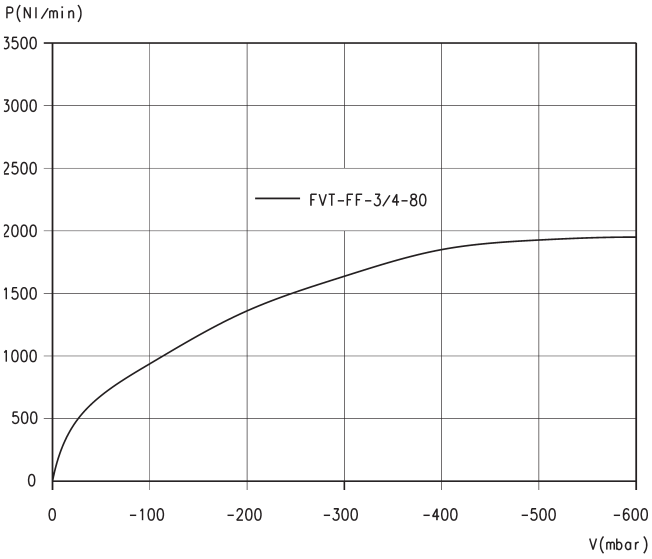

LEGEND:
P = Volumetric flow
V = Vacuum values

Note: Flow rate for different vacuum values

LEGEND:
P = Volumetric flow
V = Vacuum values

Note: Flow rate for different vacuum values

Series FVT cup filter

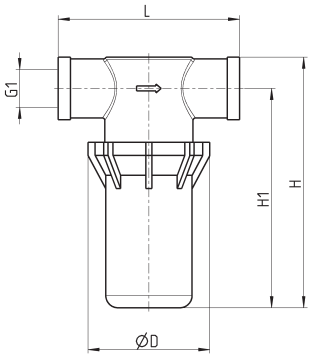

DIMENSIONS					
Mod.	D	G1	H	H1	L
FVT-FF-1/8-80	48	G1/8-F	60	50	58
FVT-FF-1/4-80	48	G1/4-F	60	50	76
FVT-FF-3/8-80	48,5	G3/8-F	97	84	77,2
FVT-FF-1/2-80	48	G1/2-F	101	88	77,2
FVT-FF-3/4-80	75	G3/4-F	137	118	90,5

Mounting foot bracket

The mod. FVT-FF-1/8-80-B is used on cup filters with ports G1/8, G1/4, G3/8 e G1/2.
The mod. FVT-FF-3/4-80-B is used on cup filters with ports G3/4.

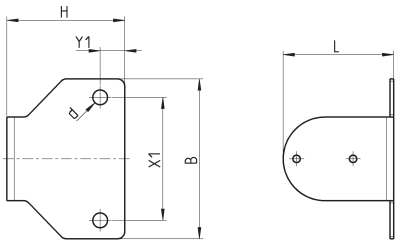

DIMENSIONS						
Mod.	B	d	H	L	X1	Y1
FVT-FF-1/8-80-B	65	6	48	45	50	10
FVT-FF-3/4-80-B	85	6	52	70	70	10

Example of vacuum calculation

System design - the procedure

In this section the design procedure is described for a complete system step by step.
This exercise is based on a typical design example.

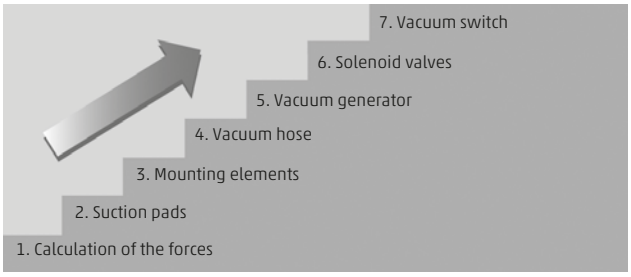

Flowchart for system design

The calculations in the example are based on the following data:

Workpiece		
Material:	steel sheets, stacked on a pallet	
Surface:	smooth, flat, dry	
Dimensions:	length:	max.2500 mm
	width:	max.1250 mm
	thickness:	max.2,5 mm
	weight:	circa 60 k

Handling system		
System used:	portal transfer unit	
Available compressed air supply:		8 bar
Control voltage: 24 V DC		
Transfer procedure:	horizontal - horizontal	
Max. acceleration values	X and Y axes:	5 m/s²
	Z axis:	5 m/s²
Cycle time:	30 s	
Planned times:	for picking up:	<1s
	for releasing:	<1s

Calculating the weight of the workpiece

For all subsequent calculations, it is important to know the mass of the workpiece to be handled.
This can be calculated with the following formula:

Mass m [kg]:m = L x B x H x ρ
L = lenght [m]
B = width [m]
H = hight [m]
ρ = density [kg/m³]

Example: m = 2,5 x 1,25 x 0,0025 x 7850
m = 61,33 kg

Forces - how high forces do the suction pads have to support?

In order to determine the necessary holding forces, the above mass calculation is needed. In addition, the suction pads must be capable of handling the acceleration forces which, in a fully automatic system, are by no means negligible. In order to simplify the calculation, the three most important and most frequent load cases are shown graphically and described below.

Important:
In the following simplified representations of the load cases I, II and III, the worst case with the highest theoretical holding force must always be used for the subsequent calculations.

Load case I: horizontal suction pads, vertical force

F_{TH}	=	theoretical holding force [N]
m	=	mass [kg]
g	=	acceleration due to gravity [9,81 m/s²]
a	=	system acceleration [m/s²] (remember to include the "emergency off" situation!)
S	=	safety factor (minimum value 1,5; for critical inhomogeneous or porous materials or rough surfaces 2,0 or higher)

Example: F_{TH} **= 61,33 x (9,81 +5) x 1,5**
F_{TH} **= 1363 N**

The suction pads are placed on a horizontal workpiece which is to be moved sideways.

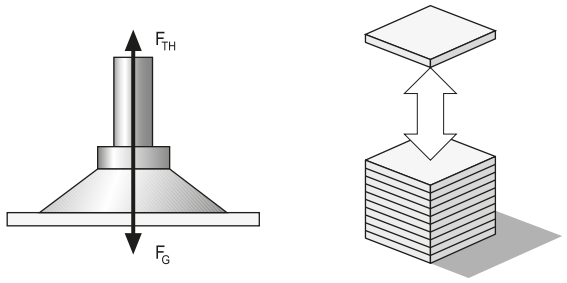

Load case II: horizontal suction pads, horizontal force

F_{TH} **= m x (g +a/μ) x S**

F_{TH}	=	theoretical holding force [N]
Fa	=	acceleration = m • a
m	=	mass [kg]
g	=	acceleration due to gravity [9,81 m/s²]
a	=	system acceleration [m/s²] (remember to include the "emergency off" situation!)
μ	=	coeff. of friction* = 0,1 for oily surfaces = 0,2 ...0,3 for wet surfaces = 0,5 for wood, metal, glass, stones,... = 0,6 for rough surfaces
S	=	safety factor (minimum value 1,5; for critical inhomogeneous or porous materials or rough surfaces 2,0 or higher)

Example: F_{TH} **= 61,33 x (9,81 +5/0,5) x 1,5**
F_{TH} **= 1822 N**

* Attention! The coefficients of friction shown above are average values. The actual values for the workpiece to be handled must be determined by testing.

The suction pads are placed on a horizontal workpiece which is to be moved sideways.

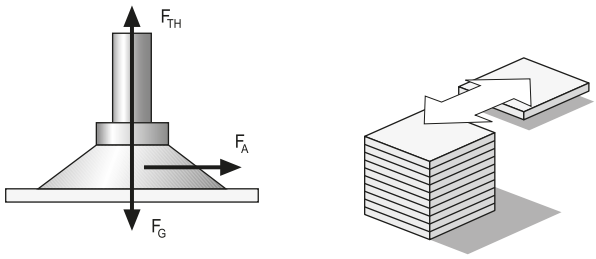

Load case III: vertical suction pads, vertical force

F_{TH} **= (m/μ) x (g +a) x S**

F_{TH}	=	theoretical holding force [N]
m	=	mass [kg]
g	=	acceleration due to gravity [9,81 m/s²]
a	=	system acceleration [m/s²] (remember to include the "emergency off" situation!)
μ	=	coeff. of friction = 0,1 for oily surfaces = 0,2 ...0,3 for wet surfaces = 0,5 for wood, metal, glass, stones, ... = 0,6 for rough surfaces
S	=	safety factor (minimum value 2; higher for critical, inhomogeneous or porous materials or rough surfaces)

Example: F_{TH} **= 61,33 x (9,81 +5/0,5) x 1,5**
F_{TH} **= 1822 N**

For the example used for this description, load case III can be ignored, since the workpieces are to be handled only in a horizontal orientation.

The suction pads are placed on a vertical or horizontal workpiece which is to be moved vertically or turned to the other orientation.

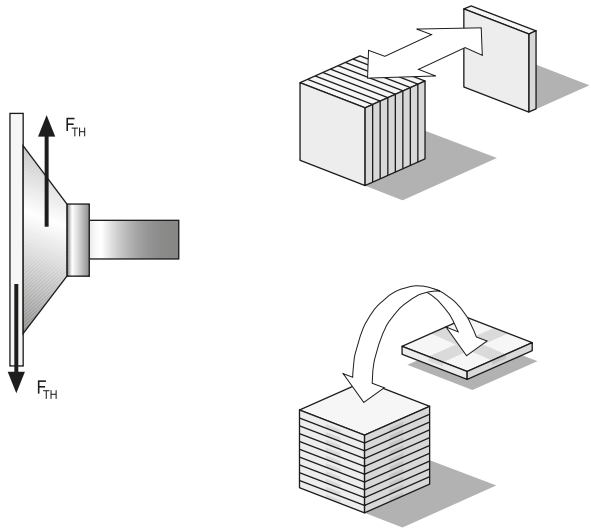

Comparison:
A comparison of the figures for load cases I and II results, in this example, in a maximum value for FTH =1822 N in load case II, and this value is therefore used for further design calculations.

How to select the suction pads

The suction pads are normally selected on the basis of the following criteria:

Operating conditions: the operating conditions (single or multiple shift operation, expected lifetime, aggressive surroundings, temperature etc.) at the point of use are decisive for the selection of the suction pads.

For the selection of the vacuum pad material in relation to the type of work piece to handle, see the table shown in the end of the vacuum pad section.

Surface: depending on the surface of the handled workpieces, certain suction-pad versions may be more suitable.
The product range includes flat and bellows suction pads.

Example:
In this example, where steel sheets are to be handled, we will use the flat suction pads, Mod. VTCF in NBR.
This is the best and most efficient solution for the handling of smooth, flat workpieces.

Calculation of the suction force F_S [N]		
F_S	=	F_{TH} /n
F_S	=	suction force
F_{TH}	=	theoretical force
n	=	number of suction pads

Example:
For medium sized (2500 x 1250 mm) steel sheets, normally 6 to 8 suction pads would be used.
The most important criterion for deciding the number of suction pads in this example, is the flexing of the steel sheet during transport.

Calculation of the suction force F_S [N]		
F_S	=	1822/6
F_S	=	304 N

According to the Technical Data regarding Series VTCF, 6 pcs. of suction pads Mod. VTCF-0950N are needed with a suction force of 340 N each.

Calculation of the suction force F_S [N]		
F_S	=	1822/8
F_S	=	228 N

According to the Technical Data regarding Series VTCF, 8 pcs. of suction pads Mod. VTCF-800N are needed with a suction force of 260 N each.

In this example we decide to use 6 pcs. of suction pads Mod. VTCF-950N since this number is sufficient and helps to keep the costs down.

Important:
- The load which each suction pad can carry is shown in the table Technical Data.
- The load-carrying capacity of the suction pad must always be greater than the calculated value.

Selection of the mounting elements

Normally, the manner in which the suction pads are mounted is defined to meet the customer's needs. However, there may be special reasons which make a specific mounting element mandatory in certain cases:

Uneven or sloping surfaces
The suction pad must be able to adapt itself to the slope:
» flexible nipple NPF

Different heights or thicknesses
The suction pads must be spring-mounted in order to compensate for varying heights:
» spring plunger NPM-NPR

Example:
In this example the steel sheets are stacked on a pallet. If the sheets are larger than the pallet, they may hang down at the ends.
This means that the suction pads must be able to compensate for considerable height differences and slope angles.

We decide to use:
Spring plunger NPM-FM-1/4-75
We need the largest possible stroke to cope with the hanging ends of the steel sheets.
The 1/4 thread is needed for connection to the flexible nipple.

Flexible nipple Mod. NPF
Optimum flexibility for inclined workpiece surfaces.

Check valves Mod. VNV
These are used on vacuum gripper systems containing multiple suction pads in order to shut off indivual suction pads which are not covered by the workpiece, (when handling work pieces of different sizes).

Note:
When selecting the mounting elements, please make sure that these can be screwed onto the suction pads, i.e. that they have threads of the same size. Also note the load-carrying capacities of the mounting elements.

Selection of vacuum hoses

The size of the vacuum hose should match the suction pads which are used.
For the selection of the suitable tube dimensions, see recommendations under Technical Data.

Example:
For exampe, from the table with Technical Data we choose a TRN 8/6 hose in polyammide.

Calculation vacuum generators

Based upon our experience and upon the values measured during the system design, we recommend to choose the vacuum generator depending on the diameter of the suction pad, according to the table below:

Calculation of the required suction rate V [M³/H, L/MIN]

V	=	n x VS
n	=	number of suction pads
V_S	=	required suction rate for a single suction pad [m³/h, l/min]

The suction rate values of the different vacuum generators can be found in the table Technical Data.

Example: **V = 6 x 16,6**
V = 99,6 l/min

Required suction rate as a function of the suction pad diameter

Suction pad Ø	Required suction rate Vs	
up to 20 mm	0,17 m³/h	2,83 l/min
up to 40 mm	0,35 m³/h	5,83 l/min
up to 60 mm	0,5 m³/h	8,3 l/min
up to 90 mm	0,75 m³/h	12,7 l/min
up to 120 mm	1 m³/h	16,6 l/min

Note:
The indicated values apply to all types of vacuum generators.
The recommended suction rate is for a single suction pad and is valid only for smooth, air-tight surfaces. For porous surfaces we recommend the execution of a suitable test before the selection of the vacuum generator.

We choose a compact ejector Mod. VEC-20 with a suction rate of 116 l/min.

Selection of vacuum switches

Vacuum switches and pressure gauges are normally selected on the basis of the functions required in the application and on the switching frequency.

The following functions are available:
- adjustable switching point
- fixed or adjustable hysteresis
- digital and/or analog output signals
- status LED
- display with keypad
- connection with M5 Female thread, G1/8 Male flange or plug-in tube

Example:
- vacuum switch with digital display, adjustable switching point and adjustable hysteresis (already integrated in the compact ejector)
- pressure gauge.

Selection of the vacuum switches and pressure gauges

Even if you are confident that the results of the system-design work are correct, you should still carry out tests with original workpieces to be on the safe side. However, the theoretical system design will give you a good idea of the general parameters for the intended application.

Technical information about suction pads

When designing a vacuum circuit and selecting suitable suction pads it is necessary to follow certain calculations to select each individual component in a correct way.

Listed below is a summary of the most common data to take into consideration.

Technical information

Lateral force
The measured value in N at a vacuum of -0,6 bar on a dry or oily, flat and smooth workpiece surface.
These values do not include a safety factor.

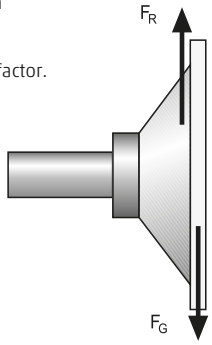

Minimum workpiece curvature radius
This specifies the minimum radius at which the workpiece can be gripped securely by the suction pad.

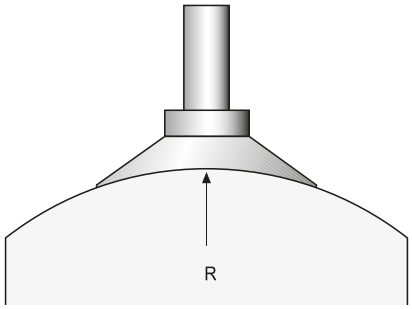

Theoretical suction force
Theoretical force (N) at a -0,6 bar measured at sea level.
Since this is a theoretical value, it is necessary to reduce this value by adding a safety factor to compensate for friction or loss of vacuum, depending on the application (from rough workpiece surface or porous material etc.).

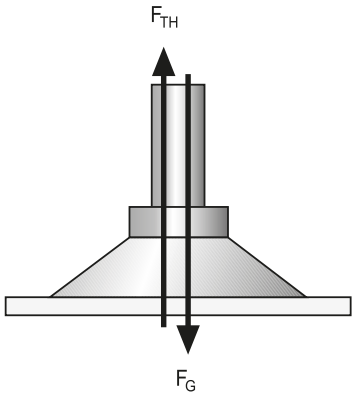

Internal volume
This is used to calculate the total volume of the gripper system.
With this value, it is also possible to calculate the evacuation time.

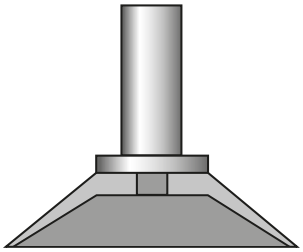

Suction pad stroke
This is the lifting effect which occurs during evacuation of a bellows type suction pad.

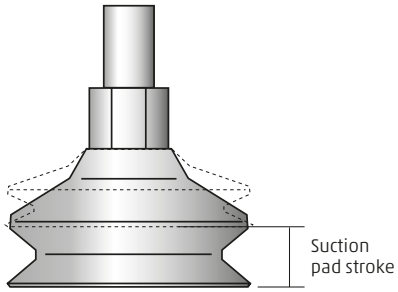

Suction pad material selection

Applications	NBR	SI
Food	•	
Oily parts	•	
Slight marking of workpieces		•
For high temperatures		•
For low temperatures		•
Very smooth surfaces (glass)	•	
Very rough surfaces (wood, stone)	•	•

Selection and configuration

Planning check-list for selection of suction pads	
What are the workpiece dimensions and weight?	This is important data for the suction force calculation and to establish the required suction force and number of suction pads (see technical information).
How is the workpiece surface (rough, structured, smooth)?	It determines the kind of suction pad (material, shape, dimensions).
Could the workpiece be dirty? If so, what kind of dirt?	This is important information to select the suction pad dimensioning (see technical information) and also for the design of the dust filter.
What is the highest workpiece temperature?	Temperature is important to select the suction pad material. At temperatures above 70°C the use of silicone versions should be considered.
Is an accurate gripping/placing/positionining, required?	Determines the structure, the type and the version of the suction pad.
What is the cycle time?	This data is important for the dimensioning and plays a part in the calculations (for instance the vacuum generator suction capacity calculation); (see the technical information).
What is the maximum acceleration during handling?	This is important for the dimensioning and design of the suction force, together with the related calculations (for instance the suction capacity and the moment of inertia); (see the techn. inf.).
Which kind of handling is needed (moving, slewing, turning over)?	This data is important to establish the dimension and the suction force calculation.

Materials summary

Chemical designation Abbreviation	Nitrile rubber NBR	Silicone SI
Wear resistance	• •	•
Resistance to permanent deformations	• •	• •
General weather resistance	• •	• • •
Resistance to ozone	•	• • • •
Resistance to oil	• • • •	•
Resistance to fuels	• •	•
Resistance to alcohol, ethanol 96 %	• • • •	• • • •
Resistance to solvents	• •	• •
General resistance to acids	•	•
Resistance to steam	• •	• •
Tensile strength	• •	•
Abrasion value in mm^3 s. DIN 53516 (approx.)	100-120 at 60 Sh.	180-200 at 55 Sh.
Specific resistance [ohm * cm]	-	-
Short-term temperature resistance in °C	from -30° to +120°	from -60° to +250°
Long-term temperature resistance in °C	from -10° to +70°	from -30° to +200°
Shore hardness to DIN 53505	from 40 to 90	from 30 to 85*
Colour/Coding	black	white

* After-bake of silicone 10 h/160 °C = +5 ...10 Shore A

• • • • excellent • • • very good • • good • poor to satisfactory

Quality: our priority commitment

Research, technological innovation, training, respect for personnel, employee and environmental safety and total customer care are all factors that Camozzi considers strategic in the achievement of quality.

To Camozzi quality is a system that ensures excellence, not only of the final product but throughout the entire business process.

Our certifications

Camozzi's main goals include quality and safety, the protection of the environment and compatibility of our activities with the territories in which they are performed.

Since 1993 Camozzi has been certified in accordance with the ISO 9001 standard for quality management. In 2003 the company obtained ISO 14001 certification for environmental management.

In the same year, DNV, the global quality assurance and risk management company, certified Camozzi's Integrated Management System, which includes both ISO 9001 and ISO 14001 standards. Furthermore, in 2013 Camozzi obtained ISO/TS 16949 certification for the Series C-Truck and Series 9000 fuel fittings, then transitioned to the new edition of the IATF 16949 standard in 2018.

From 1 July 2003, all products sold in the European Union and destined to be used in potentially explosive areas, had to be approved according directive 94/9/CE, also known as ATEX.

This directive covered both electrical and non-electrical parts, including for instance pneumatic power and control equipment.

Mandatory directives
- Directive 99/34/EC concerning liability for defective products modified by Legislative Decree 02/02/01 n° 25.
- Directive 2014/35/EU "Equipment designed for use within certain voltages".
- Directive 2014/30/EU "Electromagnetic Compatibility EMC" and relative additions.
- Directive 2014/34/EU "Atex".
- Directive 2006/42/EC "Machinery".
- Directive 2014/68/EU "Pressure Equipment Directive".
- Directive 2001/95/EC "General product safety".
- Regulation 1907/2006 concerning the Registration, Evaluation, Authorisation and Restriction of Chemicals (REACH).

Technical standards
- ISO 4414 - Pneumatic fluid power - General rules and safety requirements for systems and their components

Environmental notes
- Packaging: we respect the environment, so use materials which can be recycled, including recyclable PE and paper.
- Green Design Project: in the study of new products, the environmental impact is always taken into consideration (real project, elaboration, etc.).

Information for the use of Camozzi products

In order to ensure proper functioning of Camozzi products these general guidelines should be noted.

Air quality

While resources such as electricity, water and gas are normally supplied by external companies to guaranteed standards, compressed air is produced from the ambient atmosphere. It is therefore the user that has to guarantee compressed air quality.

High quality air is essential for proper functioning of pneumatic systems. One cubic metre of air at atmospheric pressure typically contains the following:
- more than 150 million solid particles with dimensions from 0,01 µm to 100 µm,
- fumes due to combustion,
- water vapour, with volume depending on temperature; at 30° there are about 30 g/m³ of water
- oil, up to about 0,03 mg
- micro organisms
- plus a variety of chemical contaminants, odours etc ...

The further the air is compressed, the higher the air quantity in the same volume and therefore the higher the amount of contaminants.

In order to reduce unwanted contents, compressors are fitted with filters, driers and oil separators at the inlet and outlet.

In spite of these precautions, the air, during its passage along pipes and tubes or while in storage tanks, can collect contaminants such as flakes of rust. Further, water vapour contained in the air can cool down and liquefy, then absorb and retain oil fumes.

For this reason it is advisable to fit compressed air systems and pneumatic machinery with air treatment equipment.

Air treatment: classification according to ISO 8573-1-2010 standard

ISO 8573-1-2010 Class	Solid particles				Water		Oil
	Max. Number of Particles per m³			Max Concentration mg/m³	Water pressure dew point °C	Liquid g/m³	Total content (liquid, aerosol and vapour) mg/m³
	0,1 - 0,5 µm	0,5 - 1 µm	1 - 5 µm				
0	More strict than class 1, defined by the device user						
1	≤ 20,000	≤ 400	≤ 10	-	≤ - 70°	-	≤ 0,01
2	≤ 400,000	≤ 6,000	≤ 100	-	≤ - 40°	-	≤ 0,1
3	-	≤ 90,000	≤ 1,000	-	≤ - 20°	-	≤ 1
4	-	-	≤ 10,000	-	≤ + 3°	-	≤ 5
5	-	-	≤ 100,000	-	≤ + 7°	-	-
6	-	-	-	≤ 5	≤ + 10°	-	-
7	-	-	-	5 - 10	-	≤ 0,5	-
8	-	-	-	-	-	0,5 - 5	-
9	-	-	-	-	-	5 - 10	-
X	-	-	-	> 10	-	> 10	-

Different types of air treatment equipment have different functions: isolation valves, pressure regulators, soft-start valves and of course filters.
In some applications lubricators are still used, but this is increasingly unusual.
Regarding filtering, there are international standards, such as ISO 8573-1-2010, that classify air according to its quality.

ISO 8573-1-2010 classifies compressed air according to the presence of three contaminating categories: solid particles, water or water vapour, and concentration of micro mist or oil vapours. In general, if not specified otherwise in the characteristics of the single component, Camozzi products require an ISO 8573-1-2010 class 7-4-4 air quality.

- class 7 = air has a maximum concentration of SOLID PARTICLES of 5 mg/m³.
The filtering elements are designed to separate solid particles with a dimension of more than 25 µm.
The air exiting from our filters and therefore the air at the inlet of all other components can contain solid particles with a maximum concentration of 5 mg/m3 and with a maximum dimension of 25 µm.

- class 4 = the compressed AIR temperature has to be ≤ 3°C in order for entrained water vapour to condense and become liquid.
Conventional filters have characteristics that separate the humidity in the air only if it is in a liquid or near-liquid state.
It is the cooling of the air that enables condensation and removal of water vapour.
The air flow entering the bowl of the filter sustains a minimum expansion phase, (according to the Gas Law when gas suddenly expands, its temperature drops) followed by a vortex, this enables the heavier particles and the water vapour (condensing due to the expansion) to adhere to the sides of the bowl and slide down towards the drain.
Except for specific versions, users of Camozzi filters have to install driers in their compressed air production systems that, by cooling the air, dehumidify it.

- class 4 = the concentration of OIL PARTICLES must be of maximum 5 mg/m³.
It should be noted that compressors use oil for lubrication and that this can be carried into the compressed air system in the form of aerosol, vapour or liquid.
This oil, as with all other contaminants, can be transported by the air into the pneumatic circuit. It can then contact the seals of the components and subsequently pass into the environment through the outlets of the solenoid valves. In this case coalescing filters are used to aggregate those micro-molecules of oil suspended in the air and remove them.
The use of Camozzi coalescing filters enable to reach classes 2 and 1.
It is important to keep in mind that best performance is reached only by means of a multi-phase filtering process with subsequent phases.
As illustrated, different filters have different characteristics - a very efficient filter for a certain contaminant may not be so effective for other contaminants.

The filtering elements determine the class of the filters, these elements should be replaced after a specified period or after a specified number of working hours. These parameters vary according to the characteristics of the incoming air.

Camozzi filters are subdivided into different groups:
- Filtering element of 25 µm, class 7-8-4
- Filtering element of 5 µm, class 6-8-4
- Filtering element of 1 µm, class 2-8-2 with pre-filter class 6-8-4
- Filtering element of 0,01 µm, class 1-8-1 with pre-filter class 6-8-4 residual oil content of 0,01 mg/m³
- Activated carbon, class 1-7-1 with pre-filter class 1-8-1 residual oil content of 0,003 mg/m³

The components are factory greased with special products and do not need an additional lubrication. In case it should be necessary, use ISO VG 32 oil.
The quantity of oil introduced into the circuit depends on the applications.
Camozzi suggests a maximum dosage of three drops per minute.

Pneumatic cylinders

The choice of the correct cylinder mounting and also that of the rod attachment to any moving parts, are as important as the control of parameters relating to speed, mass and radial loads.
The control of these parameters has to be guaranteed by the user.
The location of position sensors (reed switches), and their switching response times to magnetic fields, is dependent upon the type and bore size of the cylinder and the appropriate precautions need to be taken when fixing these items. (see notes on the pages about sensors).

We do not advise the use of a cylinder as a shock absorber or for pneumatic cushioning. If used at the maximum speed, we recommend gradual deceleration to avoid a violent impact between piston and the cylinder end cover.
As a general value, we calculate a maximum average speed of 1 m/sec.
In this case no lubrication is required as the lubrication introduced during assembly is sufficient to guarantee good operation.
If faster speeds are required, we suggest lubrication in the quantities described above.

Directive ATEX 2014/34/EU: Products classified for the use in potentially explosive atmospheres

ATEX 2014/34/EU

Since 19 April 2016 all products which are sold in the European Union and destined to be used in **potentially explosive atmospheres** have had to be approved according to new Directive 2014/34/EU, also known as ATEX. This Directive applies to both electrical and non-electric items, such as pneumatic drives.

Main changes introduced by Directive 2014/34/EU:

- Non-electric apparatus and devices, such as pneumatic cylinders, have to comply with the Directive.
- Equipment is classified into different categories, which identifies the potentially explosive zones in which they may be used.
- The products are identified with the CE mark Ex.
- The instructions for use and the declarations of conformity should be supplied with each product that is to be used in potentially explosive zones.
- The Directive applies to products intended to be used in zones that are potentially explosive due to the presence of dust as well as to zones where potentially explosive gases may be present.
  A potentially explosive atmosphere could be composed of gas, mist, steam or dust, which may be present constantly, intermittently or created by processes conducted within the zone. An explosion can occur when there are one or more inflammable substances plus an ignition source present.

An ignition source could be:

- Electrical (electric arcs, induced current, heat generated by the Joule effect, i.e. heat created when an electric current flows through a resistance.)
- Mechanical (heat between surfaces caused by friction, sparks generated by the collision of metallic bodies, electrostatic discharges, adiabatic compression, i.e. compression of an atmosphere causing a temperature rise)
- Chemical (exothermic reactions between materials)
- Naked flames. The products which are subject to approval are those which, during their normal use or because of a malfunction, present one or more ignition sources within a potentially explosive atmosphere.

The manufacturer has to guarantee that the product conforms to the declarations and carries the appropriate markings. Moreover, the product should always be accompanied by the appropriate instructions.

The maker and/or user of the equipment should identify the risk zone(s), as defined by Directive 99/92/CE, in which the products are to be used and ensure all instructions are followed.

In the case where a product is made up of two or more components with different markings, the component which is classified in the lowest category defines the class to which the complete product belongs.

Example:
solenoid suitable for Category 3 marked ...
Ex - II 3 Ex...

and valve suitable for Category 2 ...
Ex - II 2 Ex...

The valve unit with solenoid can be used only in Category 3 or Zone 2/22.

Zones, groups and categories

In the places and for the types of equipment subject to Directive 99/92/CE, the user should identify the classification of the zones in relation to the danger of the creation of explosive atmospheres because of the presence of gas or dust.

Apparatus and equipment for the use in potentially explosive zones are divided in groups:

Group I > apparatus used in mines

Group II > apparatus used in installations above ground

Group I: Apparatus used in mines

CATEGORY M1 Functioning in explosive atmospheres
CATEGORY M2 Non-supplied equipment in explosive atmospheres

Group II: Apparatus for installations above ground

Product category	Gas	Dust
1	Zone 0	Zone 20
2	Zone 1	Zone 21
3	Zone 2	Zone 22

Classification of zones according to Directive 99/92/CE

Category 1	Zone 0 -	Area in which (permanently, for long periods or often) an explosive atmosphere is present, consisting of a mixture of air and inflammables in the form of gas, vapour or mist.
	Zone 20 -	Area in which (permanently, for long periods or often) an explosive atmosphere is present in the form of a dust/powder cloud which is combustible in air.
Category 2	Zone 1 -	Area in which, during normal activities, the formation of an explosive atmosphere is probable, consisting of a mixture of air and inflammables in the form of gas, vapours or mist.
	Zone 21 -	Area in which occasionally during normal activities the formation of an explosive atmosphere is probable, in the form of a dust cloud which is combustible in air.
Category 3	Zone 2 -	Area in which, during normal activities, the formation of an explosive atmosphere, consisting of a mixture of air and inflammables in the form of gas, vapour or mist is not probable and, whenever this should occur, it is only of a short duration.
	Zone 22 -	Area in which, during normal activities, the formation of an explosive atmosphere in the form of a combustible dust cloud is not probable and, whenever this should occur, it is only of a short duration.

Example of Marking: Ex II 2 GD c T100°C (T5) -20°C≤Ta≤60°C

II	II Group: Devices which are to be used in spaces exposed to risks of an explosive atmosphere, different from underground spaces, mines, tunnels, etc., classified according to the criteria in Annex I of the Directive 2014/34/EU (ATEX).
2	Category: Devices designed to function in compliance with the operational parameters determined by the manufacturer and guarantee a high protection level.
GD	Qualification gas and dusts: Protected against gas (G) and explosive dusts (D).
c	Non-electrical devices: Non-electrical devices for potentially explosive atmospheres. Protection through constructive security.
T 100°C	Max. temperature for components for dusts: Max. superf. temp. of 100°C regarding potential hazards resulting from striking within the vicinity of hazardous dusts.
T5	Max. temperature for components for gas: Max. superf. temp. of 100°C regarding potential hazards which may result from striking within gas environments.
Ta	Environmental temperature: **-20°C≤Ta≤60°C.** Environmental temperature range (with dry air)

Group I: Temperature classes

Temperature = 150°C or = 450°C according to the level of dust on the apparatus.

Group II: Temperature classes

Temp. classes for gas (G)	Admissible surface temperatures
T1	450°C
T2	300°C
T3	200°C
T4	135°C
T5	100°C
T6	85°C

ATEX certified Camozzi products

APPARATUS classified as ATEX Group II

Cylinders

Series	Category	Zone	Gas/Dust
16*	2 DE-3 SE	1/21 DE -2/22 SE	G/D
24*	2 DE-3 SE	1/21 DE-2/22SE	G/D
25*	2 DE-3 SE	1/21 DE-2/22SE	G/D
31-32	2 DE-3 SE	1/21DE-2/22SE	G/D
31-32 Tandem/multi-position	2 DE	1/21 DE	G/D
40*	2 DE	1/21 DE	G/D
41*	2 DE	1/21 DE	G/D
60*	2 DE-3 SE	1/21 DE-2/22 SE	G/D
61*	2 DE-3 SE	1/21 DE-2/22 SE	G/D
62*	2 DE	1/21 DE	G/D
63*	2 DE-3 SE	1/21 DE-2/22 SE	G/D
27	2 DE	1/21 DE	G/D
QP-QPR	2 DE-3 SE	1/21 DE-2/22 SE	G/D
QN	3 SE	2/22 SE	G/D
42	2 DE-3 SE	1/21 DE-2/22 SE	G/D
ARP	2	1/21	G/D
QCT-QCB-QXT-QXB	2	1/21	G/D

Proximity switches

Series	Category	Zone	Gas/Dust
CSH/CST/CSV	3	2/22	G/D
CSG	3	2/22	G/D

Valves

Series	Category	Zone	Gas/Dust
P	3	2/22	G/D
W	3	2/22	G/D
Y	3	2/22	G/D

Solenoids

Series	Category	Zone	Gas/Dust
U70	3	2/22	G/D
H80I**	2	1/21	G/D

Pressure switches

Series	Category	Zone	Gas/Dust
PM 11**	1	0/20	G/D

Freely installable **COMPONENTS** classified as ATEX Group II

Products	Category	Zone	Gas/Dust
Silencers	2	1/21	G/D
Quick release couplings	2	1/21	G/D
Manifolds	2	1/21	G/D
Sub-bases	2	1/21	G/D
Feet	2	1/21	G/D
Caps	2	1/21	G/D
Plates	2	1/21	G/D

Valves

Series	Category	Zone	Gas/Dust
9#*	2	1/21	G/D
A#	2	1/21	G/D
2	2	1/21	G/D
3#	2	1/21	G/D
4#	2	1/21	G/D
NA (NAMUR) #	2	1/21	G/D
E (pneumatic)	2	1/21	G/D

FRL

Series	Category	Zone	Gas/Dust
MC#	2	1/21	G/D
N	2	1/21	G/D
MX#	2	1/21	G/D
T	2	1/21	G/D
CLR	2	1/21	G/D
M	2	1/21	G/D
MD#	2	1/21	G/D

* According to ISO standard
** Products with ATEX and IECEX certification
# Without solenoid

» The order code number of the certified products is obtained by adding "EX" to the standard article number
Es. 358-015 standard solenoid valve
Es. 358-015EX ATEX certified solenoid valve

Accessories available in Category 2 Zone 1/21: couplings, junctions, brackets, piston rod nuts, nuts, counter brackets, bushings, pins, clevis pins, caps, gaskets, diaphragm, sub-bases, plates, feet, hand operated valves, flow valves, flanges, screw, tie rods, automatic and blocking valves, silencers and pressure gauge, connector kits, clamps, rapid and super rapid push-in fittings, hoses, sealing rings, locking nuts. Accessories available in Category 3, Zone 2/22: adaptors, slot covers, extensions, connectors. For more information on this kind of products see the website:
http://catalogue.camozzi.com within the section: Downloads > Certifications > ATEX Directive 2014/34/EU > List of products excluded from the directive 2014/34/EU ATEX.

Camozzi around the world

Camozzi Automation S.p.A.
Società Unipersonale
Via Eritrea, 20/I
25126 Brescia
Italia
Tel. +39 030/37921
Fax +39 030/2400464
info@camozzi.com
www.camozzi.com

Camozzi Neumatica S.A.
Polo Industrial Ezeiza,
Puente del Inca 2450,
B1812IDX, Carlos Spegazzini, Ezeiza
Provincia de Buenos Aires
Argentina
Tel. +54 11/52639399
info@camozzi.com.ar
www.camozzi.com.ar

Camozzi Automation GmbH
Löfflerweg 18
A-6060 Hall in Tirol
Austria
Tel. +43 5223/52888-0
Fax +43 5223/52888-500
info@camozzi.at
www.camozzi.at

Camozzi Pneumatic
66-1, Perehodnaya str.,
220070, Minsk
Belarus
Tel. +375 17/3961170 (71)
Fax +375 17/3961170 (71)
info@camozzi.by
www.camozzi.by

Camozzi do Brasil Ltda.
Rod. Adauto Campo Dall'Orto, 2.200
Condomínio Techville
CEP 13178-440 Sumaré S.P.
Brazil
Tel. +55 19/21374500
sac@camozzi.com.br
www.camozzi.com.br

Shanghai Camozzi Automation Control Co, Ltd.
717 Shuang Dan Road, Malu
Shanghai - 201801
China
Tel. +86 21/59100999
Fax +86 21/59100333
info@camozzi.com.cn
www.camozzi.com.cn

Camozzi S.r.o.
V Chotejně 700/7
Praha - 102 00
Czech Republic
Tel. +420 272/690 994
Fax +420 272/700 485
info@camozzi.cz
www.camozzi.cz

Camozzi Automation ApS
Metalvej 7 F
4000 Roskilde
Denmark
Tel. +45 46/750202
info@camozzi.dk
www.camozzi.dk

Camozzi Automation OÜ
Osmussaare 8
13811 Tallinn
Estonia
Tel. +372 6119055
Fax +372 6119055
info@camozzi.ee
www.camozzi.ee

Camozzi Automation Sarl
5, Rue Louis Gattefossé
Parc de la Bandonniére
69800 Saint-Priest
France
Tel. +33 (0)478/213408
Fax +33 (0)472/280136
info@camozzi.fr
www.camozzi.fr

Camozzi Automation GmbH
Porschestraße 1
D-73095 Albershausen
Germany
Tel. +49 7161/91010-0
Fax +49 7161/91010-99
info@camozzi.de
www.camozzi.de

Camozzi India Private Limited
D-44, Hosiery Complex,
Phase II Extension,
Noida - 201 305
Uttar Pradesh
India
Tel. +91 120/4055252
Fax +91 120/4055200
info@camozzi-india.com
www.camozzi.in

Camozzi Pneumatic Kazakhstan LLP
Shevchenko/Radostovets,
165b/72g, off. 615
050009 Almaty
Kazakhstan
Tel. +7 727/3335334 - 3236250
Fax +7 727/2377716 (17)
info@camozzi.kz
www.camozzi.kz

Camozzi Malaysia SDN. BHD.
30 & 32, Jalan Industri USJ 1/3
Taman Perindustrian USJ 1
47600 Subang Jaya
Selangor
Malaysia
Tel. +60 3/80238400
Fax +60 3/80235626
cammal@camozzi.com.my
www.camozzi.com.my

Camozzi Neumatica de Mexico S.A. de C.V.
Lago Tanganica 707
Col. Ocho Cedros 2ª sección
50170 Toluca
México
Tel. +52 722/2707880 - 2126283
Fax +52 722/2707860
camozzi@camozzi.com.mx
www.camozzi.com.mx

Camozzi Automation AS
Verkstedveien 8
1400 Ski
Norway
Tel. +47 40644920
info@camozzi.no
www.camozzi.no

Camozzi Pneumatic LLC
Chasnikovo,
Solnechnogorskiy District
Moscow 141592
Russian Federation
Tel. +7 495/786 65 85
Fax +7 495/786 65 85
info@camozzi.ru
www.camozzi.ru

Camozzi Iberica SL
Avda. Altos Hornos de Vizcaya, 33, L-2
48901 Barakaldo - Vizcaya
Spain
Tel. +34 946 558 958
info@camozzi.es
www.camozzi.com

Camozzi Automation AB
Bronsyxegatan 7
213 75 Malmö
Sweden
Tel. +46 40/6005800
info@camozzi.se
www.camozzi.se

Camozzi Automation B.V.
De Vijf Boeken 1 A
2911 BL Nieuwerkerk a/d IJssel
The Netherlands
Tel. +31 180/316677
info@camozzi.nl
www.camozzi.nl

LLC Camozzi
Kirillovskaya Str, 1-3, section "D"
Kiev - 04080
Ukraine
Tel. +38 044/5369520
Fax +38 044/5369520
info@camozzi.ua
www.camozzi.ua

Camozzi Automation Ltd.
The Fluid Power Centre
Watling Street
Nuneaton, Warwickshire
CV11 6BQ
United Kingdom
Tel. +44 (0)24/76374114
Fax +44 (0)24/76347520
info@camozzi.co.uk
www.camozzi.co.uk

Camozzi Automation, Inc.
Street address:
2160 Redbud Boulevard, Suite 101
McKinney, TX 75069-8252
Remittances:
P.O. Box 678518
Dallas, TX 75267-8518
USA
Tel. +1 972/5488885
Fax +1 972/5482110
info@camozzi-usa.com
www.camozzi-usa.com

Camozzi Venezuela S.A.
Calle 146 con Av. 62
N°146-180
P.O. Box 529
Zona Industrial Maracaibo
Edo. Zulia
Venezuela
Tel. +58 261/4116267
info@camozzi.com.ve
www.camozzi.com.ve

Camozzi R.O.
in Hochiminh City
6th Floor, Master Building,
155 Hai Ba Trung St.,
Ward 6, District 3
Hochiminh City
Vietnam
Tel. +84 8/54477588
Fax +84 8/54477877
bhthien@camozzi.com.vn
www.camozzi.com.vn

Camozzi distributors around the world

Europe

ZULEX d.o.o.
Safeta Zajke 115b
Sarajevo
Bosnia-Herzegovina
Tel. +387 33/776580
Fax +387 33/776583
zulex@bih.net.ba
www.zulex.com.ba

L.D. GmbH
Blvd Asen
Yordanov 5
1592 Sofia
Bulgaria
Tel. +359 2/9269011
Fax +359 2/9269025
camozzi@ld-gmbh.com
www.ld-gmbh.com

Bibus Zagreb d.o.o.
Anina 91
HR 10000 Zagreb
Croatia
Tel. +385 1/3818004
Fax +385 1/3818005
bibus@bibus.hr
www.bibus.hr

TS Hydropower Ltd.
Industrial Area N°64
Aglanzia 21-03
Nicosia
Cyprus
Tel. +357 22/332085
Fax +357 22/338608
tshydro@cytanet.com.cy

AVS-Yhtiöt Oy
Rusthollarinkatu 8
02270 Espoo
Finland
Tel. +358 10/6137100
Fax +358 10/6137701
info@avs-yhtiot.fi
www.avs-yhtiot.fi

TECHNOMATIC Group IKE
Esopou str, Kalochori Industrial Park
57009, Thessaloniki
Greece
Tel. +30 2310/752773
Fax +30 2310/778732
info@technomaticgroup.gr
www.technomaticgroup.gr

Tech-Con Hungária Kft
Véső u. 9-11 (entrance: Süllő u. 8.)
1133 Budapest
Hungary
Tel. +36 1/412 4161
Fax +36 1/412 4171
tech-con@tech-con.hu
www.tech-con.hu

Loft & Raftæki
Hjallabrekka 1
200 Kópavogur
Iceland
Tel. +354 564/3000
Fax +354 564/0030
loft@loft.is
www.loft.is

DBF TECHNIC SIA
Bauskas iela 20 - 302
1004 Riga
Latvia
Tel. +371 296 26916
Fax +371 6 7808650
info@pneimatika.lv
www.pneimatika.lv

Hidroteka Engineering UAB
Chemijos 29E
LT-51333 Kaunas
Lithuania
Tel. +370 37/452969
Fax +370 37/760500
hidroteka@hidroteka.lt
www.hidroteka.lt

Rayair Automation Ltd.
KW23G - Corradino Ind. Estate
Paola, PLA3000
Malta
Tel. +356 21/672497
Fax +356 21/805181
sales@rayair-automation.com
www.rayair-automation.com

Bibus Menos Sp. z o.o.
ul. Spadochroniarzy 18
80-298 Gdańsk
Poland
Tel. +48 58/6609570
Fax +48 58/6617132
info@bibusmenos.pl
www.bibusmenos.pl

Experts d.o.o.
Mitropolit Teodosij Gologanov, 149
MK-1000 Skopje
Rep. of Macedonia
Tel. +389 2/3081970
experts@t.mk
www.experts.com.mk

Tech-Con Industry S.r.l.
Calea Crângasi N°60
Sector 6, 060346 Bucharest
Romania
Tel. +40 21/2219640
Fax +40 21/2219766
automatizari@tech-congroup.com
www.tech-con.ro

Tech-Con d.o.o. Beograd
Cara Dušana 205a
11080 Zemun - Belgrade
Serbia
Tel. +381 11/4142790
Fax +381 11/3166760
office.belgrade@tech-congroup.com
www.tech-con.rs

STAF Automation, s.r.o.
Kostiviarska 4944/5
974 01 Banská Bystrica
Slovakia
Tel. +421 48/4722777
Fax +421 48/4722755
staf@staf.sk
www.staf.sk

KOVIMEX d.o.o.
Podskrajnik 60,
SI-1380 Cerknica
Slovenia
Tel. +386 1/7096430
Fax +386 1/7051930
kovimex@kovimex.si
www.kovimex.com

BIBUS AG
Allmendstrasse 26
CH-8320 Fehraltorf
Switzerland
Tel. +41 44/8775011
Fax +41 44/8775019
info.bag@bibus.ch
www.bibus.ch

Hidrel Hidrolik Elemanlar San. Ve Tic. A.Ş.
Percemli Sok. No:7 Tunel Mevkii
34420 Karakoy Istanbul
Turkey
Tel. +90 212 251 73 18 - 249 48 81
Fax +90 212 292 08 50
info@hidrel.com.tr
www.hidrel.com.tr

>>

Camozzi distributors around the world

America

LEVCORP S.A.
Av. Roma No. 7447
Zona Obrajes
La Paz
Bolivia
Tel. +591 2 2815658
Fax +591 2 2815695
info@levcorp.bo
www.levcorp.bo

NOMADA Ltda
Panamericana Norte 2998 unidad 3036
Renca - Santiago
Chile
Tel. +56 2 2904 0032
ventas@nomadachile.com
www.nomadachile.com

Eurotécnica de Costa Rica AYM, S.A.
150 m oeste del cruce de Llorente,
hacia Epa Tibás
Costa Rica
Tel. +506 2241/4242 - 4230
Fax +506 2241/4272
eurotecnica@eurotecnicacr.com
www.eurotecnicacr.com

Fluidica Cia. Ltda.
Abelardo Moncayo Oe4-08 y Av. América
Quito, Pichincha
Ecuador
Tel. +593 2/2440848 - 2/5102004 -
2/2254773
Fax +593 2/2440848
info@fluidica-ec.com
www.fluidica-ec.com

Aplitec S.A. de C.V.
75 Av. Nte,
Residencial Escalon Norte II
Pje KL #3-C
San Salvador
El Salvador
Tel. +503 2557/2666
Fax +503 2557/2652
info@aplitecsv.com
www.aplitecsv.com

Isotex de Panamá,S.A.
Plaza El Conquistador, Local #45
Vía Tocúmen, Panamá City
Panamá
Tel. +507 217-0050
Fax +507 217-0049
info@isotexpty.com

Eicepak S.A.C.
Av. Los Cipreses N° 484 Los Ficus
Santa Anita - Lima
Perù
Tel. +51 1/3628484 - 3627127
- 3628698
ventas1@eicepak.com
www.eicepak.com

LT Industrial, SRL
Ave. Charles Summer #53, suite 24B
Plaza Charles Summer
Santo Domingo, Los Prados
Repubblica Dominicana
Tel. +1809-623-5156
Fax +1829-956-7205
info@ltindustrialrd.com

Cocles S.A.
BVAR Artigas 4543 P.O. Box 11800
Montevideo
Uruguay
Telefax +598 22030307/22006428/
22090446
cocles@adinet.com.uy
www.cocles.com.uy

Middle East

Compressed Air Technology Co.Saa
Cairo-Alexandria Desert Road Kilo 28
Behind Gas Station Emirates
Abu Rawash
Egypt
Tel. +20 35391986/35391987/35391985
Fax +20 35391990
neveen@elhaggarmisr.com
info@elhaggarmisr.com
www.elhaggarmisr.com

Automation Yeruham & Co.
34, Hahofer st.
PO Box 1844 Length 5811702 Holon
Israel
Tel. +972 73/2606401
Fax +972 3/5596616
office@ayeruham.com
www.ayeruham.com

Raymond Feghali Co.
For Trade & Industry SARL
Roumieh industrial zone - Lebanon
P.O. BOX 90-723 Jdeideh
Lebanon
Tel. +961 1/893176 - 3/660287
Fax +961 1/879500
info@raymondfeghalico.com
www.raymondfeghalico.com

Techno-Line Trading & Services WLL
Ware House 05, Building 2189
Road 1529, Block 115
Hidd
Kingdom of Bahrain
Tel. +973 17783906
Fax +973 17786906
techline@batelco.com.bh
sales@technoline.me

AL-Maram National Co. For Buildings
General Contracting W.L.L.
Shuwaikh Industrial Area Pl. Shop No. 9
Shuwaikh
Kuwait
Tel./Fax +965 24828108
Cell. +965 65615386
almaramkuwait@gmail.com
www.almaramgtc.com

Al-Hawaiya for Industrial Solutions Co.
(ALHA)
Kilo - 3, Makkah Road
P.O. Box 11429
Jeddah 21453
Saudi Arabia
Tel. +966 12/6576874
Fax +966 12/6885061
info@alha.com.sa
www.alha.com.sa

I.M.O.
Industrial Machine Trd. Co. L.L.C.
P.O. Box 20376
Sharjah
United Arab Emirates
Tel. +971 6/5437991 - 6/5437992
Fax +971 6/5437994
imo@eim.ae

Asia

PT. Golden Archy Sakti
Kompleks Prima Centre Blok B2 No.2
Jl.Pool PPD - Pesing Poglar No.11,
Kedaung Kali Angke - Cengkareng,
Jakarta Barat 11710
Indonesia
Tel. +62 21/54377888
Fax +62 21/54377089
sales@archy.co.id
www.archy.co.id

Seika Corporation
Aqua Dojima East Bldg.
16F, 4-4, 1-Chome, Dojimahama,
Kita-Ku Osaka
Japan
Tel. +81 6/63453175
Fax +81 6/63443584
konof@jp.seika.com

Polytechnic Automation
Suite 604, 6th Floor, K. S.
Trade Tower,
New Challi,
Shahrah-e-Liaquat,
Karachi - 74000,
Pakistan
Tel. +9221 32426612
Fax +9221 32426188
polytech_ent@yahoo.com

Exceltec Automation Inc.
608-G, EL-AL Building,
Quezon Avenue, Tatalon
Quezon City, 1113
Philippines
Tel. +632/4161143 - 4161141
- 731 9015
Fax +632/7121672
sales.manila@exltec.com

Exceltec Enviro Pte Ltd
Block 3025 Ubi Road 3
03-141
408653
Singapore
Tel. +65/67436083
Fax +65/67439286
sales@exltec.com

Taewon-AP
Geomdanbuk-ro 40-gil, Buk-gu
Daegu 41511
South Korea
Tel. +82 53 384 1058
Fax +82 53 384 1057
info@taewon-ap.com
www.taewon-ap.com

Korea Flutech Co. Ltd
No15-4, 101-gil Palgong-ro, Dong-gu,
Daegu, 41005
South Korea
Tel. +82 53 213 9090
Fax +82 53 353 5997
info@kflutech.com
www.kflutech.com

Savikma Automation & Engineering Services (Pvt) Ltd.
22, Wattegedara Road
Maharagama
Sri Lanka
Tel. +94 115642164
Hot line +94 777800070
Fax +94 112844777
saes@sltnet.lk

Zenith Automation International Co., Ltd.
1F., No.9, Aly. 1, Ln. 5,
Sec. 3, Ren'ai Rd.,
Da'an Dist., Taipei City 10651
Taiwan (R.O.C.)
Tel. +886 2/2781 1267
Fax +886 2/3322 8973
zaisales@z-auto.com.tw
www.z-auto.com.tw

Pneumax Co. Ltd.
107/1 Chaloem Phrakiat R.9 Rd.,
Pravet - Bangkok 10250
Thailand
Tel. +66 2/7268000
Fax +66 2/7268260
import@pneumax.co.th
www.pneumax.co.th

Africa

Boudissa Technology Sarl
25, Cité 20 Août 1955
Oued Roumane El Achour
Algiers - 16403
Algeria
Tel./Fax +213 (0) 23316751
Tel./Fax +213 (0) 23316733
contact@boudissatech.com
www.boudissatech.com

DISMATEC
Distribution de Materiels Techniques
N° RCCM-CI-ABJ-2010B1882
16 BP 236 ABIDJAN 16
Ivory Coast
Tel. +225 21267091
Fax +225 21262367
dismatec2002@yahoo.fr

Hydramatics Control Equipment
15 Village Crescent,
Linbro Business Park,
Sandton Johannesburg 2065
South Africa
Tel. +2711/6081340 - 1 - 2
Fax +2786/5516311
sales@hydramatics.co.za
www.hydramatics.co.za

A.T.C. Automatisme
Avenue Habib Bourguiba
Centra Said - BP 25 2033
Megrine
Tunisia
Tel. +216 71/297328
Fax +216 71/429084
commercial@atc-automatisme.com
www.atc-automatisme.com

Oceania

Griffiths Components Pty Ltd
605 Burwood Hwy
Knoxfield Victoria
Melbourne 3180
Australia
Tel. +61 3/9800 6500
Fax +61 3/9801 8553
enquiry@camozzi.com.au

Contacts

Camozzi Automation S.p.A.
Società Unipersonale
Via Eritrea, 20/I
25126 Brescia
Italy
Tel. +39 030 37921
info@camozzi.com

93-0518-06B007 03/2019

CAMOZZI
Automation

A Camozzi Group Company
www.camozzi.com