EP WINCH series

Rossi



Winch drives

rossi.com

Important note.

The images in the catalog are for illustrative purposes only and may include elements of the winch designed by the customer, where necessary. These elements do not constitute design constraints, nor do they imply liability on the part of Rossi. The system designer is entirely responsible for the design of the winch, including compliance with applicable technical standards.

Contents

	EP Winch Product range	4
	Introduction	**6**
	Design principles	6
	Main planetary winch features	6
	Competitive advantages	7
	Main structrural features	8
	Electric motors	9
1	**Design features**	**14**
	Designation	16
	Selection	18
	Verification	21
	Thermal power	22
	Overloads	25
	Direction of rotation	26
2	**Summary of performance, dimensions and details**	**28**
	Size 030A	31
	Size 042A	37
	Size 060A	43
	Size 085A	49
	Size 125A	55
3	**Inputs, options and cooling systems**	**60**
	Input flange dimensions	62
	Hydraulic motor input flange dimensions	63
	Optional painting	66
	NEMA	67
	NEMA motor input flanges	67
	PB brakes - Parking brakes	68
	Independent cooling units	73
	Oil temperature probe *Pt*100	75
	Miscellaneous	75

4	**Installation and maintenance**	**76**
	General information	78
	Operating conditions	79
	How supplied	80
	Lifting, handling and storage	82
	Installation	84
	Universal flange adapter	88
	Motor mounting or replacement	89
	Oil quantities	90
	Lubrication	94
	Maintenance	100
	Troubles: causes and corrective actions	101
	Technical formulae	102
	Symbols and units of measure	104
	Icons	106
	Key figures	**108**
	Global presence, local service	110
	Product Overview	112

blank page

EP Winch product range

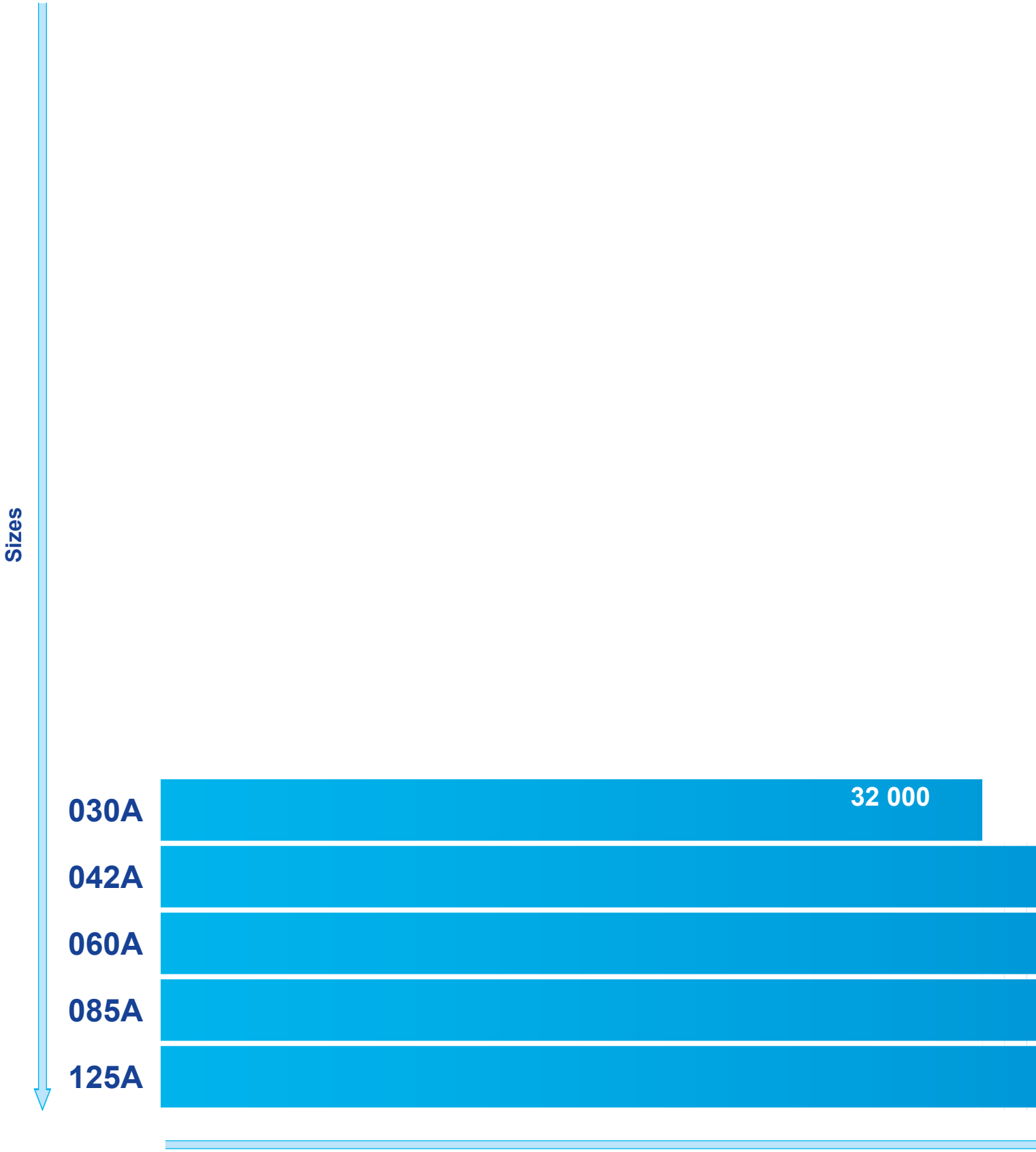



48 000

63 000

90 000

120 000

Torque $M_{N2\ FEM}$ [N m]

values for n_2 = 15 min^{-1}

Introduction

Design principles

Rossi planetary gear reducers offer cutting edge technology solutions, exploiting the experience done on all most severe applications, with a comprehensive gear reducer range in every product typology for the industrial sectors. Since over 70 years Rossi is worldwide known for its high quality products.

Applications are studied and developed thinking about the continuous development of the product in terms of:

- Flexibility
- Reliability
- Sustainability
- Total cost of use
- Performance
- Strength
- User-friendly installation, transport and maintenance
- Service
- Safety

Main planetary winch features

General

- 5 sizes with modular system
- Regular size and transmission ratio steps, according to the catalog
- Application flexibility more than expected from the catalog
- Modularity and adaptation
- Transmission ratio range from 49 to over 172
- Direct coupling with electric, hydraulic motors

Finishing

- Rational, clean and easy lines
- Compactness
- Machining quality

Design strength

- Torque peaks resistance
- Heavy radial loads allowed
- High torsional stiffness
- High thermal capacitance in the category

Introduction

Competitive advantages

Regular size and transmission ratio steps

- Realizing a range of machines or plants and rationalizing the costs
- Featuring rational and clean design of our gear units, cutting edge technology, quality safety, cleaning, precision and perfection image of the machine on which they are installed
- Facilitating assembly and periodical maintenance
- Improving painting resistance
- Compactness (dimensions and weight)
- Reducing transport costs
- Maximizing machine design optimization

Modular system

- Quick deliveries and service worldwide
- Excellent ratio in terms of solution reliability / cost

Quality and precision

- Safety
- Nearly maintenance free
- Low use cost
- Low noise
- Increased performance at the same size and weight
- Value and strength perception

Easy installation, transport and maintenance

- Reducing machine assembly times
- Reducing maintenance times

Introduction

Main structural features

Modular system

- **5 sizes with modular system**

Train of gears

- External gear pair made of casehardened and hardened steel; internal gear made of nitrided steel
- Cylindrical spur gears with **ground** profile and flank modification
- GLEASON spiral bevel gear pairs with **ground** profile
- Floating or supported planet carrier in through hardened steel or nodular cast iron according to gear reducer size

Paint

Products are painted with a two component water borne acrylic polyurethane finish colour blue RAL 5010 DIN 1843.
Paint resistant to atmospheric and aggressive agents (atmospheric corrosivity category C3 L according to ISO 12944-1 and 12944-2)

Specific standards

- Shaft heights to UNI 2946-68 (DIN 747-76, ISO 496-73)
- Nominal transmission ratios and main dimensions according to UNI 2016 standard numbers (DIN 323-74, ISO 3-73)
- Toothing profile to UNI 6587-69 (DIN 867-86, ISO 53-74)
- (long or short) cylindrical shaft ends derived from UNI ISO 775-88 (DIN 748, ISO/R 775); splined to DIN 5482 or DIN 5480
- Keys to UNI 6604-69 (DIN 6855-BI.1-68, ISO/R 773-69)
- Mounting positions derived from CEI 2-14 (DIN EN 60034-7, IEC 34.7)
- Gear load capacity verified to ISO 6336
- Bearing load capacity verified according to ISO 281-2008

Introduction

Electric motors

Main structural features (HB motor and HBZ brake motor)

- Motor **standardized to IEC**
- Asynchronous three-phase, totally-enclosed, externally ventilated, with cage rotor
- Single polarity, frequency 50 Hz, voltage Δ 230 V Y 400 V (size ≤ 132), Δ 400 V (size ≥ 160)
- **IP 55** protection, **insulation class F**, temperature rise class **B**
- Rated power delivered on continuous duty S1 (excluding some cases of motor sizes with power not according to standard; see specific documentation) and referred to nominal voltage and frequency; maximum ambient temperature 40 °C and altitude 1 000 m
- Capacity to withstand one or more overloads up to 1,6 times the nominal load for a maximum total period of 2 min per single hour
- Starting torque with direct on-line start at least 1,6 times the nominal one (it is usually higher)
- Mounting position B5 and derivates as shown in the following table
- **Suitable for inverter duty** (generous electromagnetic sizing, low-loss electrical stamping, phase separators, etc.)
- Designs available for every application need: flywheel, independent cooling fan, independent cooling fan and encoder, etc.

Constructive features of HBZ brake motor

- Particularly strong construction to withstand braking stresses; **maximum reduction of noise level**
- Spring-loaded d.c. electromagnetic brake; feeding from the terminal box; brake can also be independently fed directly from the line
- Braking torque proportioned to motor torque (usually $M_f \approx 2\ M_N$) and adjustable by adding or removing spring pairs
- Possibility of high frequency of starting
- Quick and rapid stop
- Hand lever for manual release with automatic return (on request for size ≤ 160S); removable lever rod

For other specifications and details see **specific documentation of cat. TX**.

Main coupling dimensions

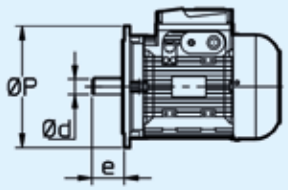

IEC 60072
(UNEL 13117-17, DIN 43677 Bl. 1.A-65)
Motor mounting position

Motor size	IM **B5** Ød × e - ØP	**B5R** Ød × e - ØP	**B5A** Ød × e - ØP
63	11 × 23 - 140	–	–
71	14 × 30 - 160	11 × 23 - 140	14 × 30 - 140
80	19 × 40 - 200	14 × 30 - 160	19 × 40 - 160
90	24 × 50 - 200	19 × 40 - 200	–
100, 112	28 × 60 - 250	24 × 50 - 200	–
132	38 × 80 - 300	28 × 60 - 250	–
160	42 × 110 - 350	38 × 80 - 300	–
180	48 × 110 - 350	–	–
200	55 × 110 - 400	48 × 110 - 350	–
225	60 × 140 - 450	–	–
250	65 × 140 - 550	60 × 140 - 450	–
280	75 × 140 - 550	–	–
315	80 × 170 - 660	75 × 140 - 550	–

Short time duty (S2) and intermittent periodic duty (S3); duty cycles S4 ... S10

In case of a duty-requirement type S2 ... S10 the motor power can be increased as per the following table; starting torque keeps unchanged.

Short time duty (S2) – Running at constant load for a given period of time less than that necessary to reach normal running temperature, followed by a rest period long enough for motor's return to ambient temperature.

Intermittent periodic duty (S3) – Succession of identical work cycles consisting of a period of running at constant load and a rest period. Current peaks on starting are not to be of an order that will influence motor heat to any significant extent.

Cyclic duration factor = $\frac{N}{N + R} \cdot 100\%$

where:

N being running time at constant load,

R the rest period and N + R = 10 min (if longer consult us).

Duty			Motor size[1)]		
			63 ... 90	**100 ... 132**	**160 ... 315**
S2	duration of running	**90 min**	1	1	1,06
		60 min	1	1,06	1,12
		30 min	1,12	1,18	1,25
		10 min	1,25	1,25	1,32
S3	cyclic duration factor	**60%**	1,12		
		40%	1,18		
		25%	1,25		
		15%	1,32		
S4 ... S10			consult us		

Frequency 60 Hz

Normal motors up to size 132 wound for 50 Hz can be fed at 60 Hz; in this case speed increases by 20%. If input-voltage corresponds to winding voltage, power remains unchanged, providing that higher temperature rise values are acceptable and that the power requirement is not unduly demanding, whilst starting and maximum torques decrease by 17%. If input-voltage is 20% higher than winding voltage, power increases by 20% whilst starting and maximum torques keep unchanged.

For brake motors, see specific literature.

From size 160 upwards motors – both standard and brake ones – should be wound for 60 Hz exploiting the 20% power increase as a matter of course.

Power available with high ambient temperature or high altitude

When motor has to run at an ambient temperature higher than 40 °C or at altitude above sea level higher than 1 000 m, it has to be derated according to the following tables:

Ambient temperature °C	**30**	**40**	**45**	**50**	**55**	**60**
P / P_N [%]	106	100	96,5	93	90	86,5

Altitude a.s.l. m	**1 000**	**1 500**	**2 000**	**2 500**	**3 000**	**3 500**	**4 000**
P / P_N [%]	100	96	92	88	84	80	76

Specific standards

Motors comply with following standards (except for any different description of each specification).

Nominal powers and dimensions:
- for mounting position IM B3 and derivatives (CENELEC HD 231, IEC 60072-1, CNR-CEI UNEL 13113-71, DIN 42673, NF C51-110, BS 5000-10 and BS 4999-141);
- for mounting positions IM B5, IM B14 and derivatives IEC 60072-1, (CENELEC HD 231, CNR-CEI UNEL 13117-71 and 13118-71, DIN 42677, NF C51-120, BS 5000-10 and BS 4999-141).

Nominal performances and running specifications:
CEI EN 60034-1, EN 60034-1, IEC 60034-2.

Protection of the housings:
CEI EN 60034-5, EN 60034-5, IEC 60034-5.

Mounting positions:
CEI EN 60034-7, EN 60034-7, IEC 60034-7.

Cylindrical shaft ends:
- ISO 775-88 (UNI-ISO 775-88, DIN 748, NF E22.051, BS 4506-70) except diameters up to 28 mm which are in tolerance j6;
- tapped butt-end hole to UNI 9321, DIN 332BI.2-70, NF E22.056;
- keyway to CNR-CEI UNEL 13502-72.

Terminal markings and direction of rotation:
CEI 2-8, CENELEC HD 52.8, IEC 60034-8.

Sound levels:
CEI EN 60034-9, EN 60034-9, IEC 60034-9.

Mechanical vibrations:
CEI EN 60034-14, EN 60034-14, IEC 60034-14.

Cooling systems:
CEI EN 60034-6, EN 60034-6, IEC 60034-6.

Mating tolerances:
IEC 60072-1, (CNR-CEI UNEL 13501-69 DIN 42955).

Determining of efficiency:
CEI EN 60034-2-1, EN 60034-2-1, IEC 60034-2-2.

Introduction

HB - HE
Asynchronous three-phase motor



Advanced design motors sharing the **same stator windings**, the same **rotors**, the same **housings**, the same **flanges**, the same performance, and the majority of technical solutions with its twin brake motor series **(HBZ, HEZ, HBF, and HBV)**.

The generous electromagnetic sizing allow to achieve **high efficiency values** complying **with different energy saving regulations**:

Efficiency class **IE2 - IE3 - IE4 (ErP)**;

The electric design (terminal block, name plate, etc.) has been studied to comply, as standard, also with **NEMA MG1-12** for the maximum application flexibility and facility.

The strength and the precision of mechanical construction, the generous bearings and the wide range of non-standard designs available on catalog make this motor particularly suitable for coupling with gearmotors.

HBZ - HEZ
Asynchronous three-phase
brake motor with **d.c. brake**



Thanks to its outstanding **low noise**, **progressivity** and **dynamic** characteristics, it is specifically suitable for **coupling with gearmotor minimizing the dynamic overloads** deriving from **starting and braking phases** (especially in case of motion reversals) and maintaining a **very good braking torque value**.

The excellent **operation progressivity** - when starting and braking - is assured by the brake anchor which is less quick in the impact (compared to a.c. HBF) and by the slight quickness of d.c. brakes.

Offering a comprehensive **range of accessories and non-standard designs** in order to satisfy all possible gearmotor application fields.

HBF
Asynchronous three-phase
brake motor with **a.c. brake**



The **high reactivity** typical of **a.c. brake** and the **high braking capacity** make this brake motor **particularly suitable for heavy duties** requiring **quick brakings** and a **high number of operations** (e.g.: lifts with high frequency of starting, usually for size < 132, and/or for jog operations).

Vice versa, its very **high dynamic characteristics** (rapidity and frequency of starting) **are not advisable for the use** in **gearmotor** coupling, especially when these features are not strictly necessary for the application (avoiding useless overloads on the whole transmission).

Comprehensive **range of accessories and non-standard designs** in order to satisfy all application needs of gearmotors (in particular for HBF: IP 56, IP 65, encoder, independent cooling fan, independent cooling fan and encoder, double extension shaft, etc.).

HBV
Asynchronous three-phase
brake motor with **d.c. safety brake**



Featuring **maximum economy**, **very reduced overall dimensions and moderate braking torque**, it is suitable for the coupling with gearmotor and can be applied as brake for **safety or parking stops** (e.g. cutting machines) and for operations at deceleration ramp end **during the running with inverter**.

The standard cast iron fan supplies a flywheel effect increasing the very good progressivity of starting and braking (typical of d.c. brake) being particularly **suitable for «light»**[1] **traverse movements**.

1) Mechanism group M4 (max 180 starts/h) and on-load running L1 (light) or L2 (moderate) to ISO 4301/1, F.E.M./II 1997.

blank page

1

Design features

Designation	16
Selection	18
Verification	21
Thermal power	22
Overloads	25
Direction of rotation	26

Designation

Gear reducer size and ratio

R	3WL	030	A	70,3	Y
Machine	Train of gears PLANETARY	Size	Stage composition [1]	Transmission ratio [1]	Type of ratio

3WL
3 stages winch inline



030 **042** **060** **085** **125**

A
catalog stage composition

X
stage composition other than catalog

49,6
...
...
171,7

Y
catalog ratio

Z
ratio composition other than catalog

Designation examples:

R 3WL 030A 70,3Y D386M1 F10e G0 PB10 - 0340 UHSA1 B5 ,...
R 3WL 060A 114Y D470M1 F10g G0 I42x350 B5 ,...

1) More stage compositions and ratios are available on request. Use selection software or contact Rossi S.p.A..

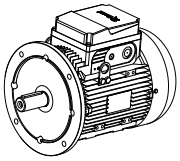

When gearmotor is supplied with a Rossi standard motor, please state motor designation according to catalog TX.

Design features

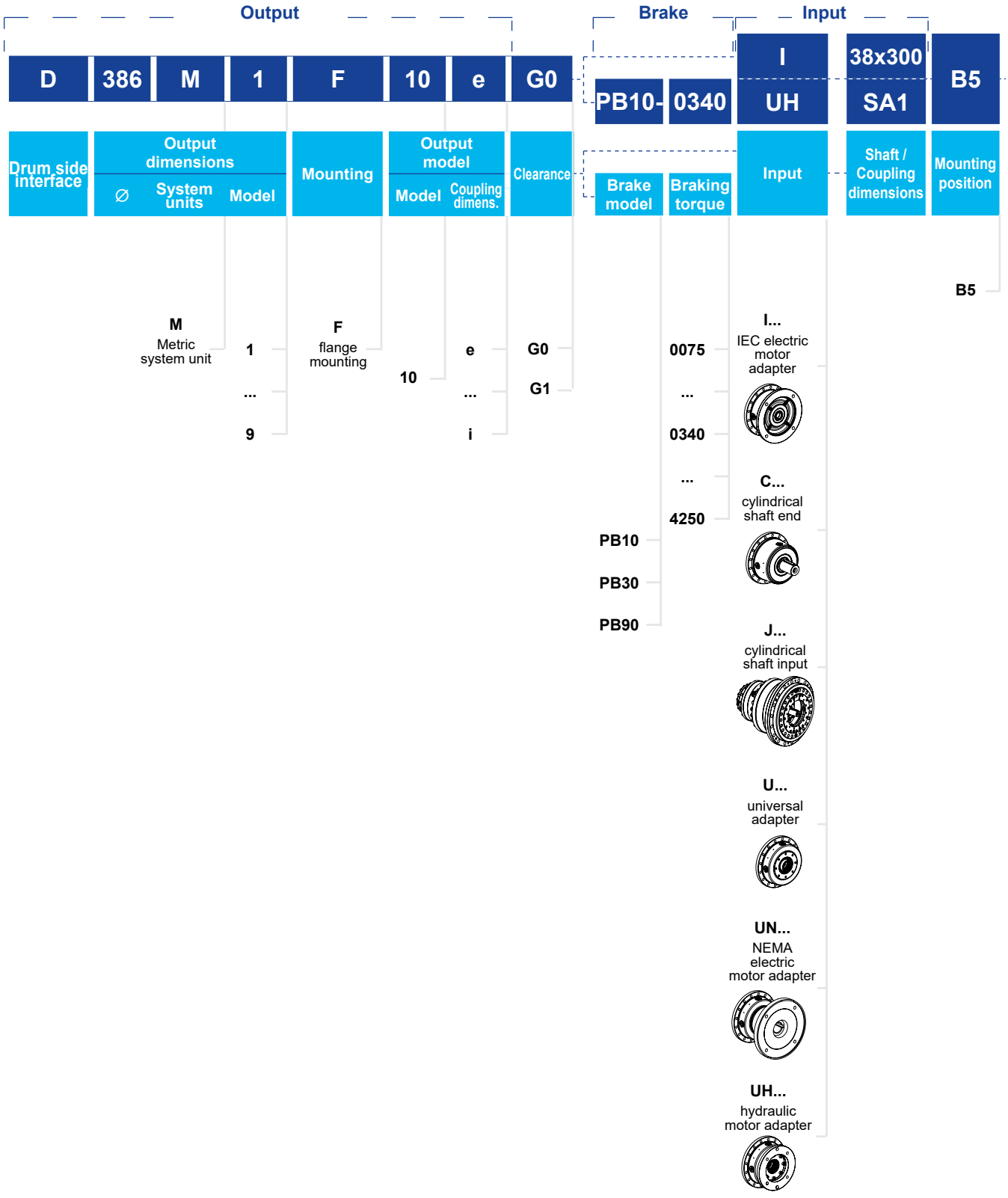

Selection

Data to be known for proper gearbox selection are listed below:
- transmission ratio ***i***;
- required output torque M_{2req} [N m];
- required output speed at the drum n_{2req} [min^{-1}];
- required lifetime L_h [h];
- the load class according to FEM 1001.

Knowing the values listed above it is possible to check that the highest level of the output dynamic torque M_{2req} is lower than the transmissible torque of the gear reducer corresponding to the FEM class.

$$M_{2req} < M_{N2FEM}$$

Then, it must be verified that

$$M_{2\,HOLD} < M_{2\,STATIC}$$

where $M_{2\,HOLD}$ is the static braking torque required at the drum and $M_{2\,STATIC}$ is the allowed static output torque.

M_{N2FEM} and $M_{2\,STATIC}$ values are stated in the gear reducer performance tables of ch. 2, for each size and ratio.

In those tables, M_{N2FEM} depending on the transmission ratio, load spectrum and class of utilization, is calculated assuming an output speed n_2 equal to 15 min^{-1} and the maximum life value L_h for each class of utilization provided by the FEM.
By knowing the actual value of n_2 and L_h, it is possible to calculate the life factor $n_2 \times L_h$ and obtain the value of M_{N2FEM} through linear interpolation.

Calculating the transmission ratio *i*

If not known, the transmission ratio is calculated as follows:

$$i = \frac{n_1}{n_{2req}}$$

Where:

- n_1 [min^{-1}] is the input speed.

Calculating the required output speed n_{2req}

The calculation of the required output speed n_{2req} is necessary in order to calculate the life factor $n_2 \times L_h$.

Assuming that the required rope speed v_{req} [m/min] is known, the output speed is determined by the following relation:

$$n_{2req} = 318{,}31 \cdot \frac{v_{req}}{D_w}$$

$$D_W = D_d + (2s_t - 1) \cdot D_r$$

where:
- D_W [mm] is the pull load application diameter at the last layer;
- D_d [mm] is the drum diameter;
- s_t [-] is the max number of overlapping rope layers;
- D_r [mm] is the rope diameter.

If the output speed is not constant it is possible to determine the equivalent speed via the following relation:

$$n_{2eq} = \frac{n_{2_1} \cdot L_{h_1} + n_{2_2} \cdot L_{h_2} + \ldots + n_{2_j} \cdot L_{h_j} + \ldots + n_{2_n} \cdot L_{h_n}}{L_h}$$

Calculating the required output torque M_{2req}

The required output torque M_{2req} is the constant torque required at the drum, or the maximum value in the load cycle, where the load is variable.

It can be calculated as follows:

$$M_{2req} = F_p \cdot \frac{D_w}{2}$$

where F_p [kN] is the pull load at the last layer.

Example

Application data:

i = 59,1
n_2 = 7 min^{-1}
L_h = 1 000 h (Class of utilization = T3)
Load spectrum = L3
$n_2 \cdot L_h = 7 \cdot 1000 = 7\,000$

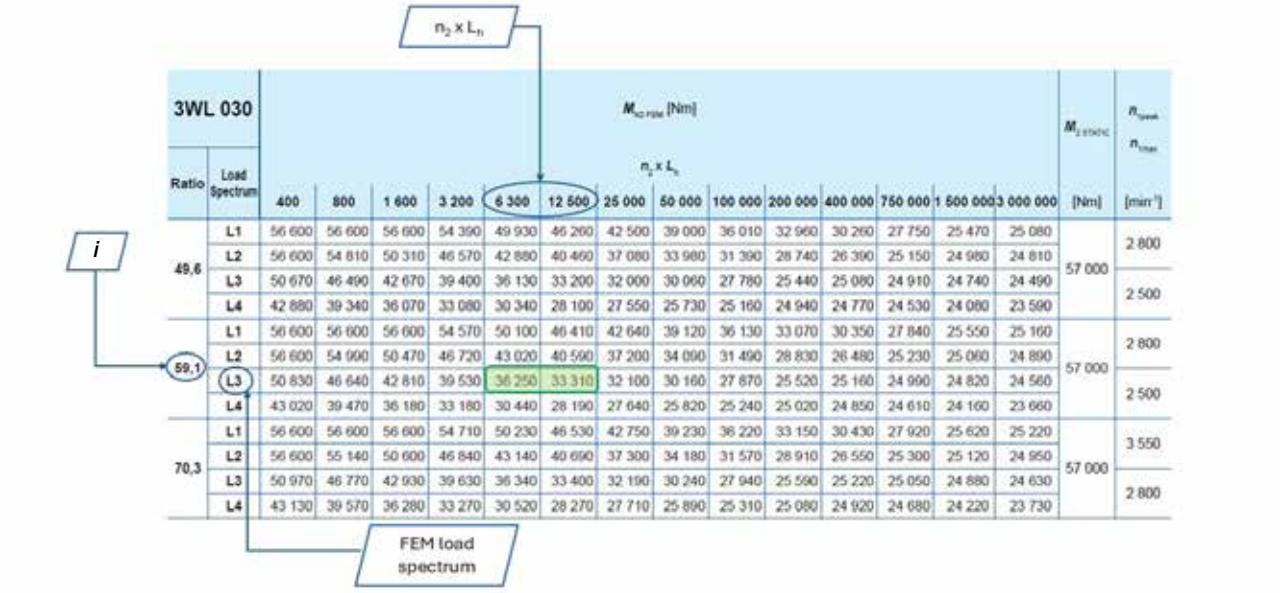

3WL 030		M_{N2FEM} [Nm] $n_2 \times L_h$													$M_{1\,STATIC}$	n_{speed} n_{max}
Ratio	Load Spectrum	400	800	1 600	3 200	6 300	12 500	25 000	50 000	100 000	200 000	400 000	750 000	1 500 000	3 000 000	[Nm]	[min^{-1}]
49,6	L1	56 600	56 600	56 600	54 390	49 930	46 260	42 500	39 000	36 010	32 960	30 260	27 750	25 470	25 080	57 000	2 800
	L2	56 600	54 810	50 310	46 570	42 880	40 460	37 080	33 980	31 390	28 740	26 390	25 150	24 980	24 810		
	L3	50 670	46 490	42 670	39 400	36 130	33 200	32 000	30 060	27 780	25 440	25 080	24 910	24 740	24 490		2 500
	L4	42 880	39 340	36 070	33 080	30 340	28 100	27 550	25 730	25 160	24 940	24 770	24 530	24 080	23 590		
59,1	L1	56 600	56 600	56 600	54 570	50 100	46 410	42 640	39 120	36 130	33 070	30 350	27 840	25 550	25 160	57 000	2 800
	L2	56 600	54 990	50 470	46 720	43 020	40 590	37 200	34 090	31 490	28 830	26 480	25 230	25 060	24 890		
	L3	50 830	46 640	42 810	39 530	36 250	33 310	32 100	30 160	27 870	25 520	25 160	24 990	24 820	24 560		2 500
	L4	43 020	39 470	36 180	33 180	30 440	28 190	27 640	25 820	25 240	25 020	24 850	24 610	24 160	23 660		
70,3	L1	56 600	56 600	56 600	54 710	50 230	46 530	42 750	39 230	36 220	33 150	30 430	27 920	25 620	25 220	57 000	3 550
	L2	56 600	55 140	50 600	46 840	43 140	40 690	37 300	34 180	31 570	28 910	26 550	25 300	25 120	24 950		
	L3	50 970	46 770	42 930	39 630	36 340	33 400	32 190	30 240	27 940	25 590	25 220	25 050	24 880	24 630		2 800
	L4	43 130	39 570	36 280	33 270	30 520	28 270	27 710	25 890	25 310	25 080	24 920	24 680	24 220	23 730		

The calculated value of $n_2 \times L_h$ is found to be between 6 300 and 12 500.

To calculate the M_{N2FEM}, it is possible to use a linear interpolation formula between two known values. The general formula is:

$$M_{N2FEM} = M_{N2FEM,1} + \frac{(n_2 \cdot L_h) - (n_2 \cdot L_h)_1}{(n_2 \cdot L_h)_2 - (n_2 \cdot L_h)_1} \cdot (M_{N2FEM,2} - M_{N2FEM,1})$$

where:

$M_{N2FEM,1}$ and $M_{N2FEM,2}$ are the values taken from the table (in the example: $M_{N2FEM,1}$ = 36 250 and $M_{N2FEM,2}$ = 33 310);

$(n_2 \cdot L_h)_1$ and $(n_2 \cdot L_h)_2$ are the corresponding values of life factor (in the example: $(n_2 \cdot L_h)_1$ = 6 300 and $(n_2 \cdot L_h)_2$ = 12 500).
Keeping in mind that the calculated starting value of $(n_2 \cdot L_h)$ is 7000, the result of the interpolation is:

M_{N2FEM} (7 000) = 35 918 [N m]

Load spectra (examples)

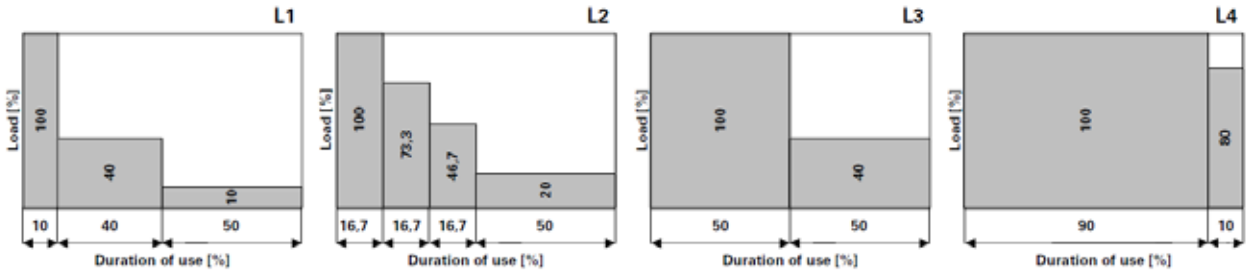

Group classification guidance

According to table T. 2.1.3.5 FEM section I, 3rd edition

Type of appliance designation	Type of use	Type of mechanism				
		Hoisting	Slewing	Luffing	Traverse	Travel
Lifting cranes		M2 - M3	M2 - M3	M1 - M2	M1 - M3	M2 - M3
Stocking and reclaiming transporters	Hook duty Grab or magnet	M5 - M6 M7 - M8	M4 M6	- -	M4 - M5 M6 - M7	M5 - M6 M7 - M8
Workshop cranes		M6	M4	-	M4	M5
Overhead travelling cranes, foundry cranes, scrapyard cranes	Grab or magnet	M6	M6	-	M6 - M7	M7 - M8
Bridge cranes for unloading, bridge cranes for containers Other bridge cranes (with crab and/or slewing jib crane)	Hook or spreader duty Hook duty	M6 - M7 M4 - M5	M5 - M6 M4 - M5	M3 - M4 -	M6 - M7 M4 - M5	M4 - M5 M4 - M5
Bridge cranes for unloading, bridge cranes (with crab and/or slewing jib crane)	Grab or magnet	M8	M5 - M6	M3 - M4	M7 - M8	M4 - M5
Drydock cranes shipyard jib cranes, jib cranes for dismantling	Hook duty	M5 - M6	M4 - M5	M4 - M5	M4 - M5	M5 - M6
Dockside cranes (slewing, gantry, etc.), floating cranes and pontoon derricks	Hook duty Grab or magnet	M6 - M7 M7 - M8	M5 - M6 M6 - M7	M5 - M6 M6 - M7	- -	M3 - M4 M4 - M5
Floating cranes and pontoon derricks for very heavy loads (>100 t)		M3 - M4	M3 - M4	M3 - M4	-	-
Deck cranes	Hook duty Grab or magnet	M4 M5 - M6	M3 - M4 M3 - M4	M3 - M4 M3 - M4	M2 M4 - M5	M3 M3 - M4
Tower cranes for building		M4	M5	M4	M3	M3
Derrick cranes		M2 - M3	M1 - M2	M1 - M2	-	-
Railway cranes mounted on carriages		M3 - M4	M2 - M3	M2 - M3	-	-
Self-propelled cranes	Hook duty	M3 - M4	M2 - M3	M2 - M3	-	-

FEM classification

Load spectrum	Class of utilization [h]									
	T0	T1	T2	T3	T4	T5	T6	T7	T8	T9
	0 - 200	200 - 400	400 - 800	800 - 1 600	1 600 - 3 200	3 200 - 6 300	6 300 - 12 500	12 500 - 25 000	25 000 - 50 000	50 000 - 100 000
L1	M1	M1	M1	M2	M3	M4	M5	M6	M7	M8
L2	M1	M1	M2	M3	M4	M5	M6	M7	M8	M8
L3	M1	M2	M3	M4	M5	M6	M7	M8	M8	M8
L4	M2	M3	M4	M5	M6	M7	M8	M8	M8	M8

Verification

Once the gear reducer has been selected based on operating parameters, it is advisable to proceed with the following checks to guarantee complete compatibility of the gear reducer with the application.

Radial loads

Planetary winch drives can support radial loads deriving from the pull of the rope wound on the drum, provided this is supported on both sides as shown in the figure.

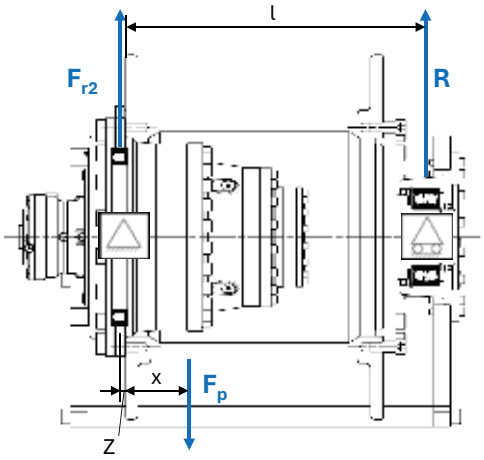

It is possible to check that the duration of the support bearing is greater than the required duration.
It is possible to calculate the radial load F_{r2} as follows:

$$F_{r2} = F_p \cdot \frac{l - x}{l + Z}$$

where F_p is the pull load of the rope. The duration in hours L_{10h} is calculated by the following relation

$$L_{10h} = \left(\frac{C}{F_{r2}}\right)^{3,33} \cdot \frac{16667}{n_2}$$

where:
- **C** is the dynamic load of the bearing [kN] (see table);
- n_2 is the gear reducer output speed.

It is also necessary to check that the maximum radial load does not exceed the static load of the bearing C_0 [kN] (see table):

$$F_{r2max} < C_0$$

Gear reducer size	C [kN]	C_0 [kN]	Z [mm]	$M_{2\ max\ FEM}$ [Nm]	$M_{2\ STATIC}$ [Nm]
030A	341	695	11.5	55700	57000
042A	418	850	7.5	82700	87000
060A	446	950	5.5	108400	110000
085A	627	1340	5.5	144900	150000
125A	671	1460	2	207500	212000

Thermal power *Pt*

Nominal thermal power Pt_N, written in red in the table, is that which can be applied at the gear reducer input, without exceeding 95 °C approximately oil temperature[1)] when operating in following running conditions:

- input speed n_1 = 1 400 min^{-1};
- horizontal mounting position;
- continuous duty S1;
- maximum ambient temperature of 40 °C (table also includes values referred to 20 °C);
- maximum altitude 1 000 m.

1) The corresponding temperature in the housing surface is approx. 85° C, but in some areas may achieve a local temperature equal to the oil one.

Nominal thermal power Pt_N

Gear reducer size	Train of gears Pt_N kW 3WL	
	20 °C	40 °C
030A	19,1	14,4
042A	23,9	18,0
060A	30,2	22,5
085A	38,3	28,4
125A	45,0	33,8

If the running conditions are different than the ones previously listed, thermal power ***Pt*** may differ from the nominal power Pt_N described above according to the formula:

$$Pt = Pt_N \cdot ft_1 \cdot ft_2 \cdot ft_3$$

where ft_1, ft_2, ft_3 are stated in the following tables:

Thermal factor ft_1 as dependent on input speed

ft_1	Input speed n_1 [min^{-1}]										
	≤ 355	**450**	**560**	**710**	**900**	**1 120**	**1 400**	**1 800**	**2 240**	**2 800**	**3 150**
	2	1,8	1,6	1,4	1,25	1,12	**1**	0,71	0,56	0,4	0,355

Thermal factor ft_2 as dependent on ambient temperature and type of duty

ft_2

Maximum ambient temperature °C	continuous S1	on intermittent load S3 ... S6 Cyclic duration factor [%] for 60 min running[1)]			
		60	**40**	**25**	**15**
50	0,8	0,95	1,06	1,25	1,32
40	**1**	1,18	1,32	1,5	1,7
30	1,18	1,4	1,6	1,8	2
20	1,32	1,6	1,8	2	2,24
10	1,5	1,8	2	2,24	2,5

1) $\frac{\text{Duration of running on load [min]}}{60} \cdot 100\ [\%]$

Thermal factor ft_3 according to installation altitude

ft_3

Altitude a.s.l. m	ft_3
≤ 1 000	**1**
1 000 ÷ 2 000	0,95
2 000 ÷ 3 000	0,9
3 000 ÷ 4 000	0,85
> 4 000	0,8

Calculation of the **equivalent applied power P_{1th}**

When the exact duty cycle is known, it is possible, or rather recommended, to calculate the equivalent applied power with the formula below.

However, when having at least a load level with power $P_{2i} > Pt$, **applied for a duration equal or longer than $t_i \geq 20$ min, it is necessary to consider this load level as S1 when dimensioning power P_{th}.**

$$P_{1th} = \frac{1}{\eta} \cdot \sqrt[3]{\frac{P_{21}^3 \cdot t_1 + P_{22}^3 \cdot t_2 + \ldots + P_{2i}^3 \cdot t_i + \ldots + P_{2n}^3 \cdot t_n}{t_c}}$$

where:

P_{1th} [kW]	is the equivalent applied power of the load cycle
η	is the gear reducer efficiency
P_{2i} [kW]	is the power, referred to low speed shaft, required in the time interval t_i
t_c	is the total duration of cycle ($t_c = t_1 + t_2 + \ldots + t_n$)

In this case choose factor ft_2 from the continuous duty column **S1**.

Check that the applied power P_1 (or P_{1th}) is lower than or equal to the thermal one Pt.

$$P_1 \text{ (or } P_{1th}) \leq Pt$$

If the thermal verification is not satisfied, it is possible to install an independent cooling unit with **heat exchanger**.

Heat exchanger power required P_S

For the heat exchanger power required by the independent cooling unit:

$$P_S \geq (P_{1max} - Pt_N \cdot ft_1 \cdot ft_2 \cdot ft_3) \cdot (1 - \eta) \cdot K_1$$

where:

P_S [kW]	nominal power of the independent cooling unit;
P_{1max} [kW]	maximum power absorbed by the driven machine (when missing sure data about the absorbed power, adopt the installed power P_1);
Pt_N [kW]	nominal thermal power;
ft_1, ft_2, ft_3	thermal factors;
η	gear reducer efficiency;
K_1	= 1,18 (takes into account the decrease of the exchanger efficiency due to dirt on the external surface);

see independent cooling units on ch. 3.

Speed limits

The maximum input speed is for continuous duty S1, according to the train of gears. Values are stated in «Data and performance summary» ch. 2.
For intermittent duty or for particular needs, higher speeds are possible, but always lower than n_{1peak} values.
Peak speed is admitted for a maximum duration of 15 s, including a proper rest period for the cooling of gear reducer, especially on high speed shaft side.
When the output speed n_2 is lower than 1 min^{-1}, the oil volume will be increased by 10%.

Efficiency η

The value is indicative and depends on the transmitted power, operating speed, oil temperature, etc.
For $M_2 \ll M_{N2}$, **η** could considerably decrease (consult us).

Train of gears
3WL
0,91

Overloads

Dynamic or static overloads values, must be lower than $M_{N2\ FEM\ max}$ and $M_{2\ STATIC}$, respectively.

Overloads are normally generated when:

- starting or braking on full load (especially for high inertias and low transmission ratios);
- applied motor power higher than that required;
- other static or dynamic causes.

These general observations on overloads are accompanied by some formulae for carrying out evaluations in certain typical instances.

- Starting torque:

  In the absence of specific values, the starting torque can be calculated with the following formula:

$$M_2\ \text{start} = \left(\frac{M\ \text{start}}{M_N} \cdot M_2\ \text{available} - M_2\ \text{required}\right) \frac{J}{J + J_0} + M_2\ \text{required}$$

  where:

  M_2 required is the torque absorbed by the machine through work and frictions;
  M_2 available is the output torque due to the motor's nominal power;
  J_0 is the moment of inertia (of mass) of the motor;
  J is the external moment of inertia (of mass) – gear reducers, couplings, driven machine – referred to the motor shaft;
  M start / M_N is the ratio of motor peak (see our cat. TX).

  NOTE: when seeking to verify that starting torque is sufficiently high for starting, take into account starting friction, if any, in evaluating M_2 required.

- Stopping machines with high kinetic energy (high moments of inertia combined with high speeds) with brake motor:

  Verify braking stress by means of the formula:

$$\left(\frac{Mf}{\eta} \cdot i + M_2\ \text{required}\right) \frac{J}{J + J_0} - M_2\ \text{required}$$

  where:

  Mf is the braking torque setting. For other symbols see our electrical motor catalog.

Load peaks

The maximum static or dinamic overloads that can happen occasionally during the life of gear reducer must be lower than $M_{2\ STATIC}$.

Direction of rotation

The output direction of rotation is opposite to the input direction of rotation

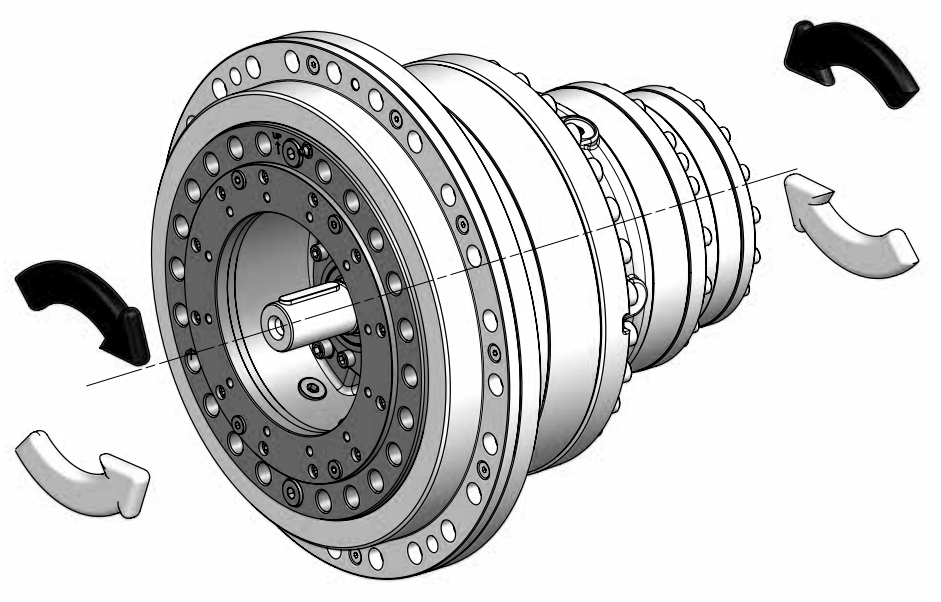

blank page

2

Summary of performance, dimensions and details

Sizes	
030A	31
042A	37
060A	43
085A	49
125A	55

blank page

2

030A

042A
060A
085A
125A

blank page

Class of utilization [h]									
T0	T1	T2	T3	T4	T5	T6	T7	T8	T9
200	400	800	1 600	3 200	6 300	12 500	25 000	50 000	100 000

3WL 030		$M_{N2\ FEM}$ [N m] $n_2 \times L_h$													$M_{2\ STATIC}$	n_{1peak} n_{1max} [1)]
Ratio	Load Spectrum	400	800	1 600	3 200	6 300	12 500	25 000	50 000	100 000	200 000	400 000	750 000	1 500 000	3 000 000	N m	min^{-1}
49,6	L1	56 600	56 600	56 600	54 390	49 930	46 260	42 500	39 000	36 010	32 960	30 260	27 750	25 470	25 080	57 000	2 800
	L2	56 600	54 810	50 310	46 570	42 880	40 460	37 080	33 980	31 390	28 740	26 390	25 150	24 980	24 810		
	L3	50 670	46 490	42 670	39 400	36 130	33 200	32 000	30 060	27 780	25 440	25 080	24 910	24 740	24 490		*2 500*
	L4	42 880	39 340	36 070	33 080	30 340	28 100	27 550	25 730	25 160	24 940	24 770	24 530	24 080	23 590		
59,1	L1	56 600	56 600	56 600	54 570	50 100	46 410	42 640	39 120	36 130	33 070	30 350	27 840	25 550	25 160	57 000	2 800
	L2	56 600	54 990	50 470	46 720	43 020	40 590	37 200	34 090	31 490	28 830	26 480	25 230	25 060	24 890		
	L3	50 830	46 640	42 810	39 530	36 250	33 310	32 100	30 160	27 870	25 520	25 160	24 990	24 820	24 560		*2 500*
	L4	43 020	39 470	36 180	33 180	30 440	28 190	27 640	25 820	25 240	25 020	24 850	24 610	24 160	23 660		
70,3	L1	56 600	56 600	56 600	54 710	50 230	46 530	42 750	39 230	36 220	33 150	30 430	27 920	25 620	25 220	57 000	3 550
	L2	56 600	55 140	50 600	46 840	43 140	40 690	37 300	34 180	31 570	28 910	26 550	25 300	25 120	24 950		
	L3	50 970	46 770	42 930	39 630	36 340	33 400	32 190	30 240	27 940	25 590	25 220	25 050	24 880	24 630		*2 800*
	L4	43 130	39 570	36 280	33 270	30 520	28 270	27 710	25 890	25 310	25 080	24 920	24 680	24 220	23 730		
75,2	L1	56 600	56 600	56 600	54 770	50 280	46 580	42 800	39 270	36 260	33 190	30 460	27 940	25 640	25 250	57 000	4 000
	L2	56 600	55 190	50 650	46 890	43 180	40 730	37 330	34 210	31 600	28 930	26 570	25 320	25 150	24 980		
	L3	51 020	46 810	42 970	39 670	36 380	33 430	32 220	30 270	27 970	25 620	25 250	25 080	24 910	24 650		*2 800*
	L4	43 180	39 610	36 320	33 300	30 550	28 290	27 740	25 910	25 330	25 110	24 940	24 700	24 250	23 750		
89,4	L1	56 600	56 600	56 600	54 880	50 380	46 680	42 890	39 350	36 340	33 260	30 530	28 000	25 690	25 300	57 000	4 000
	L2	56 600	55 310	50 760	46 990	43 270	40 820	37 410	34 290	31 670	28 990	26 630	25 370	25 200	25 030		
	L3	51 130	46 910	43 060	39 750	36 450	33 500	32 290	30 330	28 030	25 670	25 300	25 130	24 960	24 710		*2 800*
	L4	43 270	39 690	36 390	33 370	30 620	28 350	27 800	25 960	25 380	25 160	24 990	24 750	24 300	23 800		
105	L1	56 600	56 600	56 600	54 980	50 470	46 750	42 960	39 420	36 400	33 310	30 580	28 050	25 740	25 340	57 000	4 000
	L2	56 600	55 400	50 850	47 070	43 340	40 890	37 480	34 340	31 720	29 040	26 670	25 420	25 240	25 070		
	L3	51 210	46 990	43 130	39 820	36 520	33 560	32 340	30 380	28 080	25 710	25 340	25 170	25 000	24 750		*2 800*
	L4	43 340	39 760	36 450	33 430	30 670	28 400	27 850	26 010	25 430	25 200	25 030	24 790	24 340	23 840		
114	L1	56 600	56 600	56 600	55 010	50 500	46 790	42 990	39 440	36 420	33 340	30 600	28 070	25 760	25 360	57 000	4 000
	L2	56 600	55 440	50 880	47 100	43 370	40 920	37 500	34 370	31 740	29 060	26 690	25 430	25 260	25 090		
	L3	51 250	47 020	43 160	39 850	36 540	33 580	32 370	30 400	28 090	25 730	25 360	25 190	25 020	24 760		*2 800*
	L4	43 370	39 790	36 480	33 450	30 690	28 420	27 870	26 030	25 440	25 220	25 050	24 810	24 350	23 860		
134	L1	56 600	56 600	56 600	55 090	50 570	46 850	43 040	39 490	36 470	33 380	30 640	28 110	25 790	25 390	57 000	4 000
	L2	56 600	55 510	50 950	47 160	43 430	40 970	37 550	34 410	31 790	29 100	26 730	25 470	25 290	25 120		
	L3	51 310	47 080	43 220	39 900	36 590	33 630	32 410	30 440	28 130	25 760	25 390	25 220	25 050	24 800		*2 800*
	L4	43 430	39 840	36 530	33 500	30 730	28 460	27 900	26 060	25 480	25 250	25 080	24 840	24 390	23 890		
146	L1	42 750	42 750	42 750	42 750	40 460	37 480	34 470	31 700	29 380	26 990	24 890	22 670	20 440	18 440	57 000	4 000
	L2	42 750	42 750	40 900	37 880	34 970	32 160	29 570	27 720	25 780	23 590	21 340	19 250	17 370	16 850		
	L3	41 100	37 810	34 790	32 190	29 430	26 820	24 310	22 010	21 200	20 130	18 440	17 050	16 700	16 370		*2 800*
	L4	34 830	32 050	29 510	27 140	24 510	22 140	19 980	18 590	17 960	17 080	16 740	16 400	16 100	15 770		
172	L1	42 800	42 800	42 800	42 800	40 500	37 520	34 510	31 730	29 410	27 020	24 920	22 690	20 460	18 460	57 000	4 000
	L2	42 800	42 800	40 940	37 920	35 000	32 190	29 600	27 750	25 810	23 610	21 360	19 270	17 390	16 860		
	L3	41 140	37 850	34 830	32 230	29 460	26 840	24 340	22 030	21 220	20 150	18 460	17 070	16 720	16 380		*2 800*
	L4	34 860	32 090	29 540	27 170	24 540	22 160	20 000	18 610	17 980	17 100	16 750	16 410	16 120	15 790		

1) Maximum input speed valid for continuous duty cycle.

Note: When approval is required by DNV, please contact us.

030A - Main dimensions

Motor size IEC	d_M × P	Y	1)	Train of gears 3WL Dimension h	Code
100	28×250	310	405	103	**I28×250**
112	28×250	336	435	103	**I28×250**
132	38×300	445	553	120	**I38×300**
160	42×350	573	640	153	**I42×350**
180	48×350	613	734	153	**I48×350**
200	55×400	654	734	153	**I55×400**
225	60×450	710	–	183	**I60×450**

I ...

EP cat.

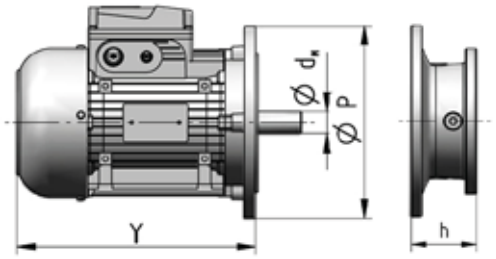

NEMA motor adapter



U



EP cat.

Train of gears	L	Code
3WL	62	EP cat.

Hydraulic motor adapter



PB10 brake



PB30 brake



Radial loads $F_{r1\ adm}$ admitted on high speed shaft end of **Inline** gear reducers.

n_1 × L_h	3WL A	3WL B	3WL C
900 000	20 000	14 000	10 600
1 120 000	19 000	12 500	9 500
1 400 000	17 000	11 800	9 000
1 800 000	16 000	10 600	8 000
2 240 000	15 000	10 000	7 500
2 800 000	14 000	9 500	7 100
3 550 000	12 500	8 500	6 700
4 500 000	11 800	8 000	6 000
5 600 000	11 200	7 500	5 600
7 100 000	10 000	6 700	5 300
9 000 000	9 500	6 300	4 750
11 200 000	8 500	6 000	4 500
14 000 000	8 000	5 600	4 250
18 000 000	7 500	5 000	3 750
22 400 000	6 700	4 750	3 550
28 000 000	6 300	4 250	3 350
35 500 000	6 000	4 000	3 000
45 000 000	5 300	3 750	2 800

C ...

EP cat.

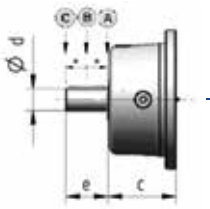

Train of gears	d	e	c	Code
3WL	48	82	115	**C48×82**

Note: For “type J” inputs, no radial loads are allowed.

D386M1 F10e

Splined shaft connection

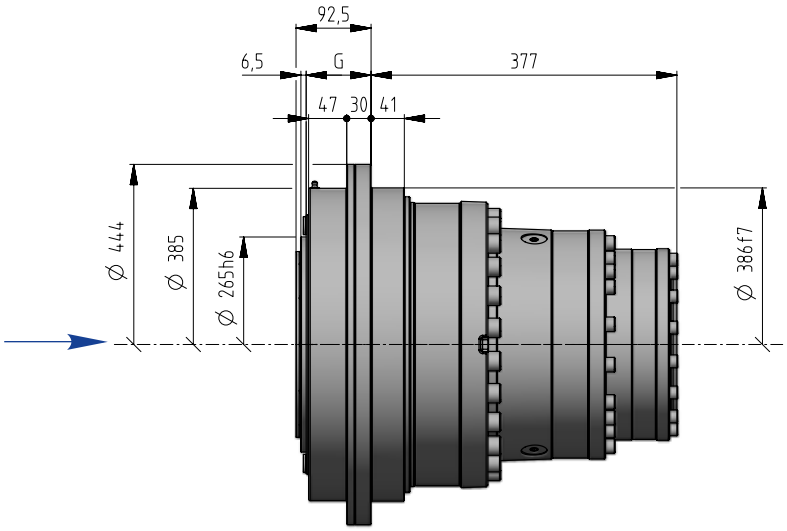

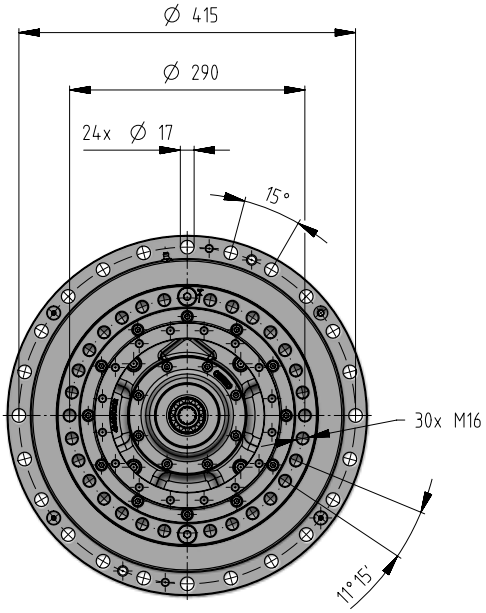

Cylindrical input shaft J48x82

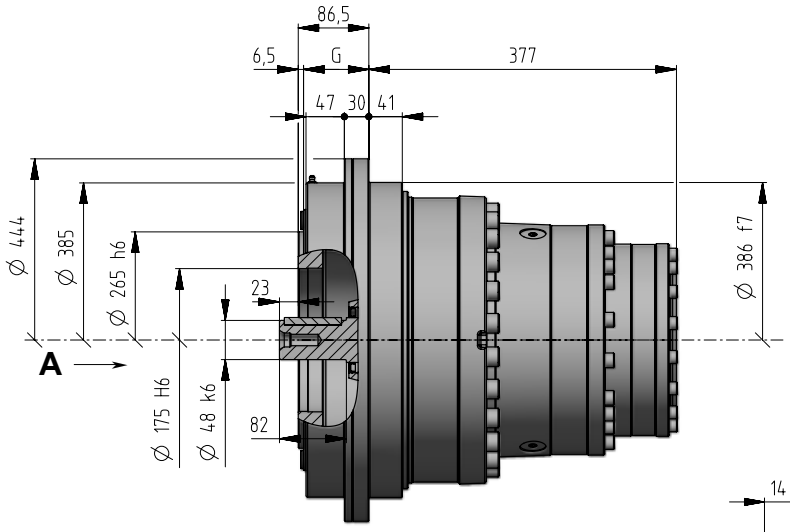

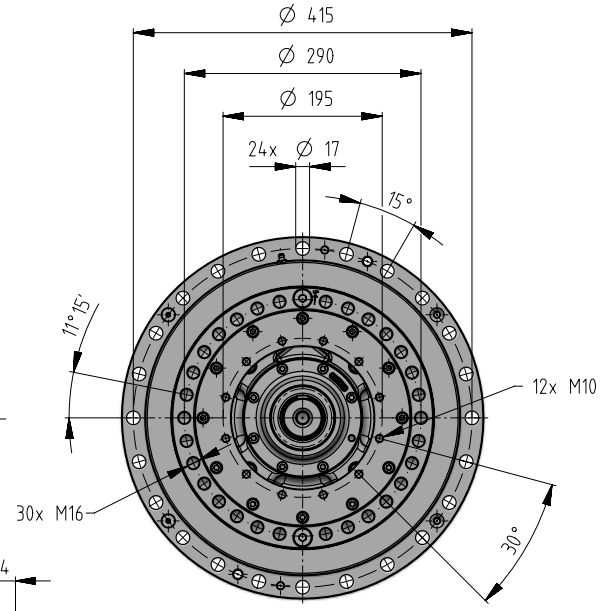

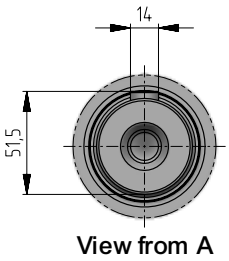

View from A

Clearance	G
G0	80
G1	79±1

kg	Input options Code						
	I28×250	I38×300	I42×350	I48×350	I55×400	C48x82	J48x82
3WL	216	219	226	226	229	220	207

blank page

2

030A
042A
060A
085A
125A

blank page

Class of utilization [h]									
T0	T1	T2	T3	T4	T5	T6	T7	T8	T9
200	400	800	1 600	3 200	6 300	12 500	25 000	50 000	100 000

3WL 042		$M_{N2\ FEM}$ [N m] $n_2 \times L_h$													$M_{2\ STATIC}$	n_{1peak} n_{1max} [1)]
Ratio	Load Spectrum	400	800	1 600	3 200	6 300	12 500	25 000	50 000	100 000	200 000	400 000	750 000	1 500 000	3 000 000	N m	min^{-1}
50,7	L1	86 600	86 650	84 020	81 470	74 970	69 340	63 640	57 630	51 580	49 210	45 100	41 310	37 840	37 190	87 000	2 800
	L2	86 220	82 320	75 430	69 670	64 010	60 510	54 390	50 780	46 830	42 800	39 240	37 290	37 040	36 790		
	L3	75 980	69 640	63 820	58 870	53 940	49 500	47 550	44 820	41 350	37 800	37 190	36 930	36 680	36 430		*2 500*
	L4	64 200	58 170	53 900	49 360	45 210	41 710	40 920	38 260	37 320	36 980	36 730	36 480	36 230	35 870		
60,4	L1	86 600	86 920	84 290	81 720	75 210	69 560	63 840	58 540	54 030	49 370	45 250	41 440	37 960	37 300	87 000	3 550
	L2	86 490	82 580	75 660	69 890	64 210	60 700	55 670	50 940	46 980	42 930	39 370	37 410	37 160	36 900		
	L3	76 220	69 860	64 020	59 060	54 110	49 660	47 700	44 960	41 490	37 920	37 300	37 050	36 800	36 550		*2 800*
	L4	64 400	59 040	54 080	49 510	45 350	41 840	41 050	38 380	37 440	37 100	36 850	36 590	36 340	35 980		
71,9	L1	86 600	86 600	84 510	81 940	75 410	69 740	64 010	58 700	54 180	49 500	45 370	41 550	38 060	37 400	87 000	3 550
	L2	86 720	82 790	75 860	70 080	64 380	60 860	55 820	51 070	47 100	43 050	39 470	37 510	37 250	37 000		
	L3	76 420	70 050	64 190	59 210	54 250	49 790	47 830	45 080	41 590	38 020	37 400	37 150	36 890	36 640		*2 800*
	L4	64 570	59 190	54 220	49 640	45 470	41 950	41 160	38 480	37 530	37 190	36 940	36 690	36 440	36 080		
84,2	L1	75 820	75 820	75 820	71 820	65 870	60 930	55 940	51 320	47 460	43 500	40 020	36 730	33 670	32 770	87 000	4 000
	L2	75 820	72 410	66 430	61 370	56 400	53 210	48 850	44 850	41 500	38 050	34 910	32 870	31 260	30 000		
	L3	66 780	61 290	56 270	51 980	47 740	43 900	41 970	39 540	36 790	33 640	32 770	30 360	29 740	29 130		*2 800*
	L4	56 450	51 830	47 610	43 760	40 180	36 940	35 900	33 120	32 070	30 410	29 800	29 180	28 650	28 060		
91,4	L1	86 600	86 600	84 760	82 180	75 630	69 950	64 200	58 870	54 340	49 650	45 500	41 670	38 170	37 510	87 000	4 000
	L2	86 980	83 040	76 090	70 290	64 580	61 040	55 990	51 220	47 240	43 180	39 590	37 620	37 360	37 110		
	L3	76 640	70 260	64 380	59 390	54 420	49 940	47 970	45 210	41 720	38 140	37 510	37 260	37 000	36 750		*2 800*
	L4	64 770	59 370	54 380	49 790	45 610	42 070	41 280	38 600	37 650	37 300	37 050	36 800	36 550	36 180		
107	L1	86 600	86 600	84 900	82 320	75 760	70 070	64 310	58 970	54 430	49 730	45 580	41 740	38 240	37 580	87 000	4 000
	L2	86 600	83 180	76 220	70 400	64 680	61 140	56 080	51 310	47 320	43 250	39 650	37 680	37 430	37 170		
	L3	76 770	70 370	64 490	59 490	54 510	50 020	48 050	45 290	41 790	38 200	37 580	37 320	37 070	36 810		*2 800*
	L4	64 870	59 470	54 470	49 880	45 680	42 140	41 350	38 660	37 710	37 370	37 110	36 860	36 610	36 240		
126	L1	76 120	76 120	76 120	72 110	66 140	61 170	56 160	51 520	47 650	43 670	40 180	36 880	33 800	32 900	87 000	4 000
	L2	76 120	72 700	66 690	61 610	56 630	53 420	49 050	45 030	41 660	38 200	35 050	33 000	31 390	30 120		
	L3	67 050	61 530	56 490	52 190	47 930	44 080	42 140	39 700	36 930	33 770	32 900	30 490	29 860	29 250		*2 800*
	L4	56 670	52 040	47 800	43 930	40 340	37 090	36 050	33 250	32 200	30 530	29 910	29 300	28 760	28 170		
137	L1	86 600	86 600	81 590	75 440	69 380	63 940	58 790	53 790	49 540	45 050	41 360	39 040	36 380	35 650	87 000	4 000
	L2	82 310	76 170	70 090	66 060	60 800	55 940	51 250	46 910	43 220	40 420	36 820	35 950	35 230	34 520		
	L3	69 980	64 660	59 430	54 540	51 040	46 090	44 450	41 560	38 780	36 370	35 650	34 930	34 230	33 550		*2 800*
	L4	59 330	54 420	49 940	45 840	41 890	39 160	37 600	35 940	35 500	34 990	34 370	33 680	33 000	32 340		
160	L1	76 250	76 250	76 250	72 230	66 250	61 280	56 250	51 610	47 730	43 750	40 250	36 940	33 860	32 960	87 000	4 000
	L2	76 250	72 820	66 800	61 720	56 720	53 510	49 130	45 100	41 730	38 270	35 110	33 050	31 440	30 170		
	L3	67 160	61 640	56 590	52 280	48 010	44 150	42 210	39 760	37 000	33 830	32 960	30 540	29 910	29 300		*2 800*
	L4	56 770	52 120	47 880	44 010	40 410	37 150	36 110	33 310	32 260	30 580	29 960	29 350	28 810	28 220		

1) Maximum input speed valid for continuous duty cycle.

Note: When approval is required by DNV, please contact us.

042A - Main dimensions

Motor size IEC	d_M × P	Y	Y 1)	Train of gears 3WL Dimension h	Code
100	28×250	310	405	103	**I28×250**
112	28×250	336	435	103	**I28×250**
132	38×300	445	553	120	**I38×300**
160	42×350	573	640	153	**I42×350**
180	48×350	613	734	153	**I48×350**
200	55×400	654	734	153	**I55×400**
225	60×450	710	–	183	**I60×450**

I ...

EP cat.

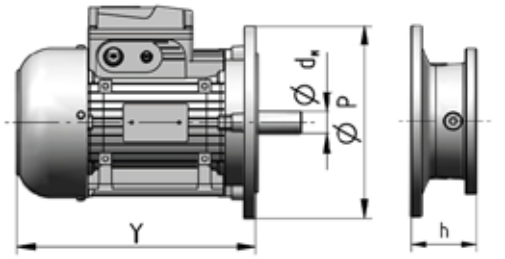

NEMA motor adapter



U



EP cat.

Train of gears	L	Code
3WL	62	EP cat.

Hydraulic motor adapter



PB10 brake



PB30 brake



Radial loads $F_{r1\ adm}$ admitted on high speed shaft end of **Inline** gear reducers.

n_1 × L_h	3WL A	3WL B	3WL C
900 000	20 000	14 000	10 600
1 120 000	19 000	12 500	9 500
1 400 000	17 000	11 800	9 000
1 800 000	16 000	10 600	8 000
2 240 000	15 000	10 000	7 500
2 800 000	14 000	9 500	7 100
3 550 000	12 500	8 500	6 700
4 500 000	11 800	8 000	6 000
5 600 000	11 200	7 500	5 600
7 100 000	10 000	6 700	5 300
9 000 000	9 500	6 300	4 750
11 200 000	8 500	6 000	4 500
14 000 000	8 000	5 600	4 250
18 000 000	7 500	5 000	3 750
22 400 000	6 700	4 750	3 550
28 000 000	6 300	4 250	3 350
35 500 000	6 000	4 000	3 000
45 000 000	5 300	3 750	2 800

C ...

EP cat.

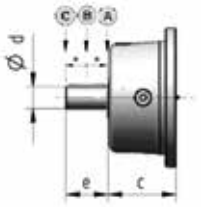

Train of gears	d	e	c	Code
3WL	48	82	115	**C48×82**

Note: For “type J” inputs, no radial loads are allowed.

D440M1 F10f

Splined shaft connection

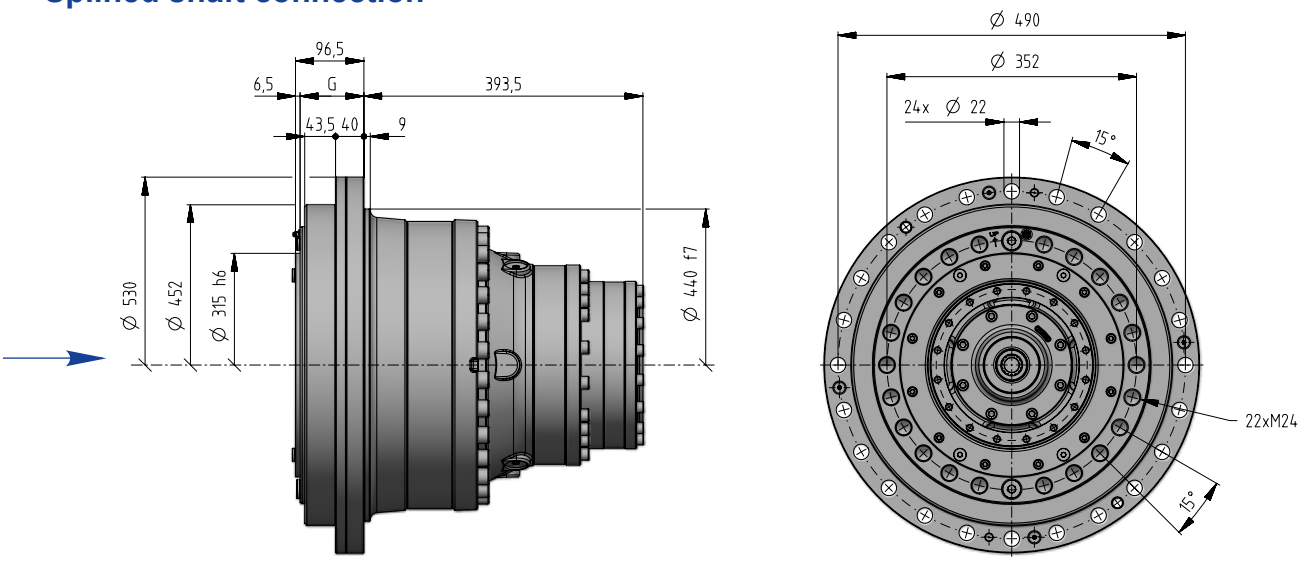

Cylindrical input shaft J48x82

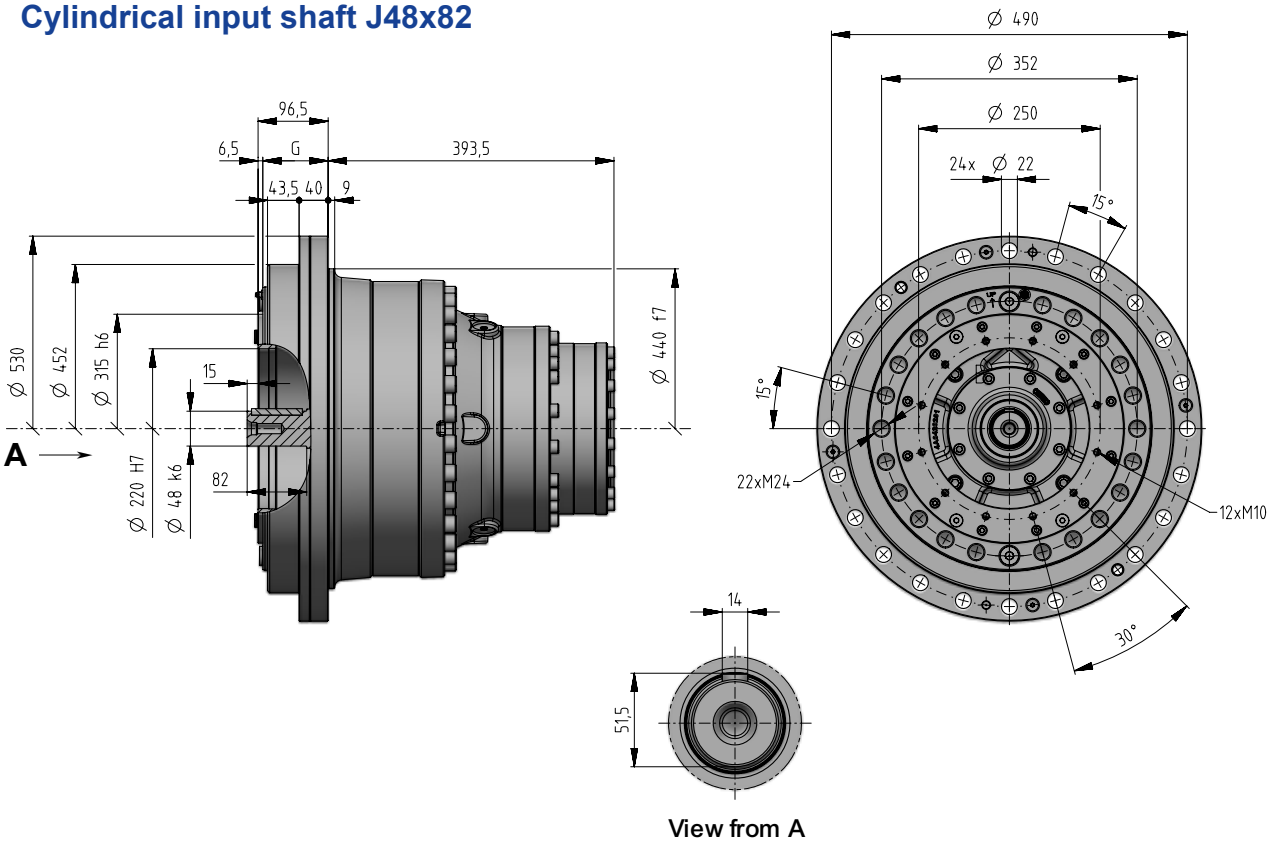

View from A

Clearance	G
G0	90
G1	89±1

kg	Input options Code						
	I28×250	I38×300	I42×350	I48×350	I55×400	C48x82	J48x82
3WL	216	219	226	226	229	220	207

blank page

2

030A
042A
060A
085A
125A

blank page

Class of utilization [h]									
T0	T1	T2	T3	T4	T5	T6	T7	T8	T9
200	400	800	1 600	3 200	6 300	12 500	25 000	50 000	100 000

3WL 060		$M_{N2\ FEM}$ [N m] $n_2 \times L_h$													$M_{2\ STATIC}$	n_{1peak} n_{1max} [1)]
Ratio	Load Spectrum	400	800	1 600	3 200	6 300	12 500	25 000	50 000	100 000	200 000	400 000	750 000	1 500 000	3 000 000	N m	min^{-1}
49,6	L1	93 870	90 990	88 490	84 660	76 890	69 960	63 300	56 560	50 640	48 610	48 210	47 800	47 400	47 000	110 000	2 800
	L2	90 670	86 470	80 030	72 670	65 950	59 690	53 380	50 500	49 560	47 970	47 570	47 160	46 760	46 370		
	L3	76 790	69 470	65 180	62 970	56 930	51 230	50 650	49 910	48 980	47 390	47 000	46 600	46 200	45 810		*2 500*
	L4	63 320	56 910	55 840	52 120	50 880	50 470	49 900	49 170	48 110	46 670	46 280	45 890	45 500	45 110		
59,1	L1	94 170	91 280	88 780	86 870	85 070	83 450	82 020	75 700	69 430	62 780	57 400	53 420	48 860	48 100	110 000	3 550
	L2	90 960	88 190	85 800	84 080	82 550	78 530	71 970	65 480	59 680	55 380	50 700	48 230	47 900	47 580		
	L3	88 310	85 630	82 830	76 010	69 880	64 070	61 520	57 990	53 480	48 810	48 100	47 770	47 440	47 120		*2 800*
	L4	83 340	76 360	69 660	63 950	58 490	53 940	52 910	49 410	48 260	47 830	47 500	47 180	46 850	46 530		
70,3	L1	109 500	109 500	109 500	106 930	97 910	90 400	82 910	75 910	70 060	64 000	58 570	53 560	48 990	48 220	110 000	3 550
	L2	109 500	107 520	98 370	90 700	83 290	78 750	72 160	66 060	60 850	55 530	50 840	48 360	48 030	47 700		
	L3	99 070	90 720	83 050	76 530	70 070	64 250	61 690	58 190	53 620	48 940	48 230	47 890	47 570	47 240		*2 800*
	L4	83 560	76 560	70 090	64 120	58 640	54 080	53 060	49 540	48 390	47 950	47 630	47 300	46 980	46 660		
75,2	L1	94 520	91 620	89 100	87 190	85 100	78 330	71 760	65 510	59 940	55 940	54 810	52 590	49 040	48 270	110 000	4 000
	L2	91 290	88 510	86 120	80 980	74 410	68 530	62 800	58 380	57 260	53 030	50 890	48 410	48 080	47 750		
	L3	86 320	79 330	75 220	71 810	66 060	60 870	58 650	54 200	52 750	48 990	48 270	47 940	47 610	47 290		*2 800*
	L4	72 680	66 840	64 870	59 270	56 690	53 700	52 210	49 590	48 440	48 000	47 680	47 350	46 610	45 650		
89,4	L1	109 500	109 500	109 500	107 250	98 210	90 680	83 160	76 090	69 440	64 190	58 750	53 730	49 140	48 370	110 000	4 000
	L2	109 500	107 850	98 680	90 980	83 550	78 990	72 380	66 260	61 030	55 700	50 990	48 510	48 180	47 850		
	L3	99 370	91 000	83 310	76 770	70 280	64 440	61 880	58 370	53 780	49 090	48 370	48 040	47 710	47 390		*2 800*
	L4	83 820	76 800	70 310	64 320	58 820	54 250	53 220	49 690	48 540	48 100	47 780	47 450	47 120	46 800		
105	L1	103 470	95 860	89 240	83 920	79 790	76 970	69 590	62 830	57 160	50 980	47 160	46 180	45 220	44 280	110 000	4 000
	L2	90 860	85 650	81 240	77 940	72 140	65 280	59 030	53 440	48 740	46 570	45 610	44 670	43 740	42 840		
	L3	81 270	75 790	68 480	61 740	59 040	55 660	51 050	47 730	46 840	45 210	44 280	43 370	42 470	41 590		*2 800*
	L4	69 270	62 400	56 250	52 220	49 990	47 370	46 690	45 950	45 150	43 530	42 640	41 760	40 900	40 410		
114	L1	109 500	109 500	109 500	107 510	98 440	90 900	83 360	76 320	70 440	64 340	58 890	53 850	49 260	48 490	110 000	4 000
	L2	109 500	108 110	98 910	91 200	83 740	79 170	72 550	66 420	61 180	55 830	51 120	48 630	48 290	47 960		
	L3	99 610	91 210	83 510	76 950	70 450	64 600	62 030	58 510	53 910	49 210	48 490	48 160	47 830	47 500		*2 800*
	L4	84 020	76 980	70 480	64 470	58 960	54 380	53 350	49 810	48 660	48 220	47 890	47 560	47 240	46 910		
134	L1	109 500	109 500	109 500	104 660	98 570	91 020	83 470	76 420	69 970	61 920	58 840	53 920	49 330	48 550	110 000	4 000
	L2	109 500	106 770	99 040	91 320	83 860	79 280	72 490	65 610	60 670	55 900	51 180	48 690	48 360	48 030		
	L3	99 740	91 330	83 620	77 050	70 540	64 680	62 110	58 580	53 980	49 280	48 550	48 220	47 890	47 560		*2 800*
	L4	84 130	76 620	69 120	64 560	59 040	54 450	53 420	49 880	48 720	48 280	47 950	47 620	47 300	46 980		
146	L1	83 800	83 800	83 800	83 800	82 640	75 960	70 020	64 150	59 230	54 160	49 070	44 440	40 280	36 550	110 000	4 000
	L2	83 800	83 800	83 200	76 750	69 950	63 250	58 160	54 570	50 790	46 250	41 960	38 050	34 440	33 400		
	L3	83 650	76 670	70 300	63 920	57 690	52 660	47 840	43 380	41 890	39 750	36 550	33 810	33 110	32 430		*2 800*
	L4	70 600	64 740	58 920	53 170	48 030	43 510	39 450	36 800	35 570	33 860	33 170	32 490	31 890	31 240		
172	L1	83 890	83 890	83 890	83 890	82 730	76 040	70 090	64 210	59 300	54 210	49 120	44 490	40 330	36 580	110 000	4 000
	L2	83 890	83 890	83 290	76 830	70 020	63 320	58 220	54 630	50 840	46 300	42 000	38 090	34 480	33 430		
	L3	83 740	76 750	70 370	63 990	57 750	52 720	47 890	43 420	41 940	39 790	36 580	33 840	33 150	32 470		*2 800*
	L4	70 680	64 800	58 980	53 230	48 080	43 560	39 500	36 830	35 600	33 900	33 210	32 520	31 930	31 270		

1) Maximum input speed valid for continuous duty cycle.

Note: When approval is required by DNV, please contact us.

060A - Main dimensions

Motor size IEC	d_M × P	Y	Y 1)	Train of gears 3WL Dimension h	Code
100	28×250	310	405	103	**I28×250**
112	28×250	336	435	103	**I28×250**
132	38×300	445	553	120	**I38×300**
160	42×350	573	640	153	**I42×350**
180	48×350	613	734	153	**I48×350**
200	55×400	654	734	153	**I55×400**
225	60×450	710	–	183	**I60×450**

I ...

EP cat.

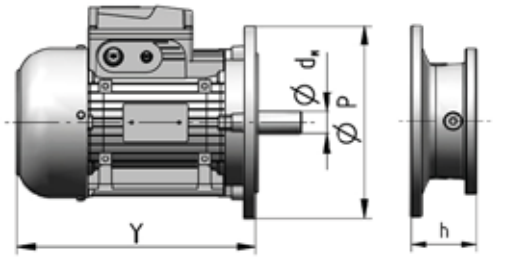

NEMA motor adapter



U



EP cat.

Train of gears	L	Code
3WL	62	EP cat.

Hydraulic motor adapter



PB10 brake



PB30 brake



Radial loads $F_{r1\ adm}$ admitted on high speed shaft end of **Inline** gear reducers.

n_1 × L_h	3WL A	3WL B	3WL C
900 000	20 000	14 000	10 600
1 120 000	19 000	12 500	9 500
1 400 000	17 000	11 800	9 000
1 800 000	16 000	10 600	8 000
2 240 000	15 000	10 000	7 500
2 800 000	14 000	9 500	7 100
3 550 000	12 500	8 500	6 700
4 500 000	11 800	8 000	6 000
5 600 000	11 200	7 500	5 600
7 100 000	10 000	6 700	5 300
9 000 000	9 500	6 300	4 750
11 200 000	8 500	6 000	4 500
14 000 000	8 000	5 600	4 250
18 000 000	7 500	5 000	3 750
22 400 000	6 700	4 750	3 550
28 000 000	6 300	4 250	3 350
35 500 000	6 000	4 000	3 000
45 000 000	5 300	3 750	2 800

C ...

EP cat.

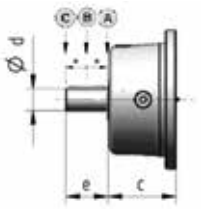

Train of gears	d	e	c	Code
3WL	48	82	115	**C48×82**

Note: For “type J” inputs, no radial loads are allowed.

D470M1 F10g

Splined shaft connection

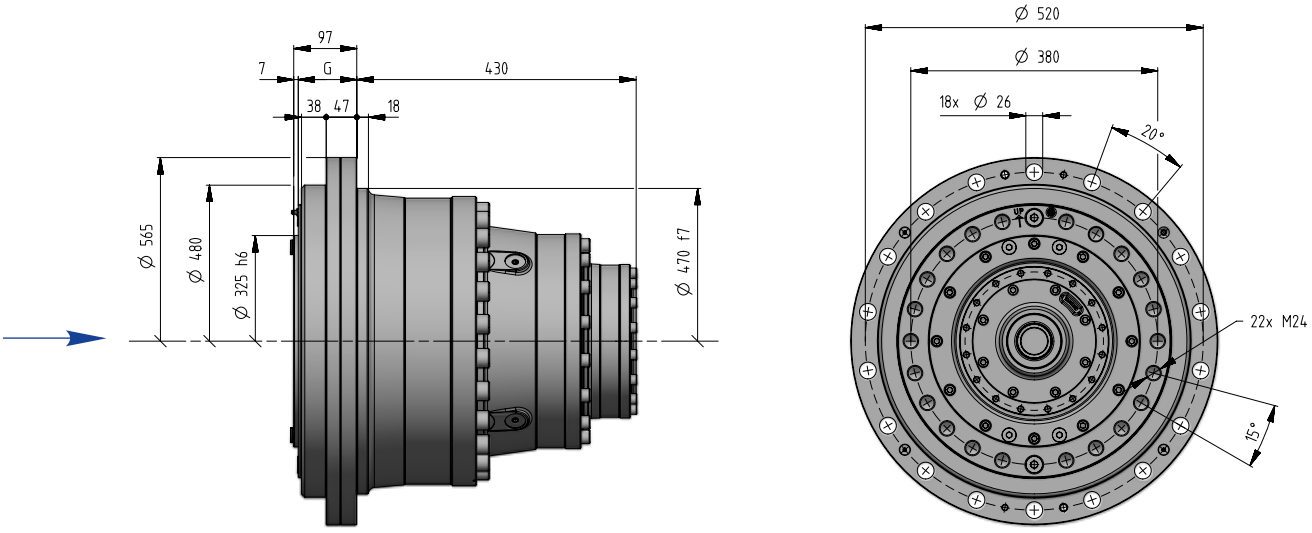

Cylindrical input shaft J48x82

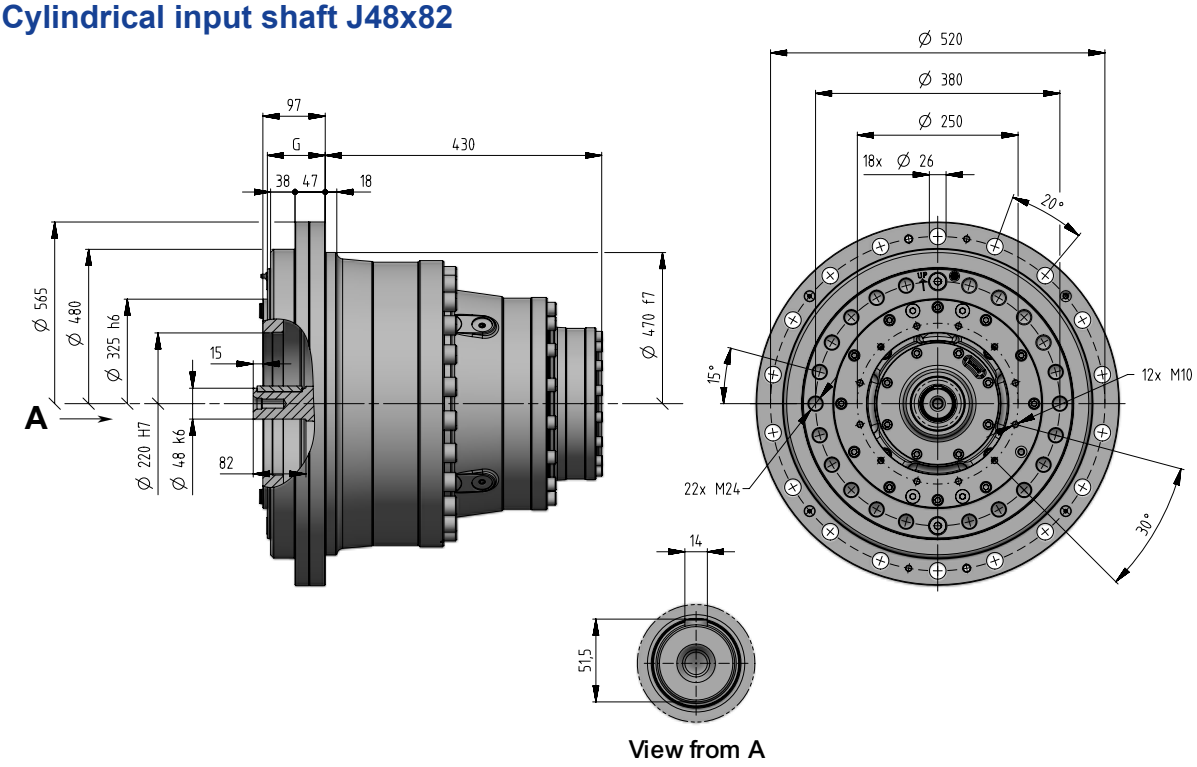

View from A

Clearance	G
G0	90
G1	89±1

kg	Input options Code						
	I28×250	I38×300	I42×350	I48×350	I55×400	C48x82	J48x82
3WL	367	370	377	377	380	371	362

blank page

2

030A
042A
060A
085A
125A

blank page

Class of utilization [h]									
T0	T1	T2	T3	T4	T5	T6	T7	T8	T9
200	400	800	1 600	3 200	6 300	12 500	25 000	50 000	100 000

3WL 085		$M_{N2\ FEM}$ [N m] $n_2 \times L_h$													$M_{2\ STATIC}$	n_{1peak} n_{1max} [1]
Ratio	Load Spectrum	400	800	1 600	3 200	6 300	12 500	25 000	50 000	100 000	200 000	400 000	750 000	1 500 000	3 000 000	N m	min^{-1}
59,1	L1	149 400	149 400	147 390	142 850	138 830	133 450	122 420	112 080	103 450	94 410	86 430	79 070	72 360	71 090	150 000	2 800
	L2	149 400	146 880	142 400	133 900	123 010	116 280	106 570	97 500	89 820	81 960	75 070	71 300	70 810	70 330		
	L3	146 270	133 960	122 630	113 020	103 510	94 900	91 030	85 930	79 190	72 280	71 090	70 610	70 130	69 650		2 240
	L4	123 400	113 070	103 510	94 690	86 630	79 800	78 310	73 210	71 370	70 700	70 220	69 740	69 260	68 790		
70,3	L1	149 400	149 400	147 790	143 240	139 200	133 820	122 750	112 390	103 730	94 660	86 670	79 290	72 560	71 290	150 000	3 150
	L2	149 400	147 280	142 790	134 270	123 350	116 600	106 860	97 760	90 060	82 180	75 270	71 490	71 000	70 520		
	L3	146 660	134 320	122 960	113 330	103 790	95 160	91 280	86 160	79 410	72 480	71 290	70 800	70 320	69 840		2 240
	L4	123 740	113 370	103 790	94 950	86 870	80 020	78 530	73 410	71 570	70 890	70 410	69 930	69 450	68 980		
76,1	L1	149 400	149 400	147 950	143 390	139 190	128 310	117 980	108 390	100 190	91 430	83 540	75 560	70 300	68 860	150 000	2 800
	L2	149 400	147 430	141 850	130 220	119 640	112 370	103 570	94 570	86 650	78 680	71 260	69 460	68 030	66 630		
	L3	140 720	130 210	119 460	108 770	98 410	89 000	85 740	80 990	75 020	70 290	68 860	67 450	66 060	64 710		2 240
	L4	119 370	109 970	99 570	89 800	80 900	75 500	72 520	69 350	68 520	67 550	66 330	64 970	63 640	62 340		
89,4	L1	149 400	149 400	148 250	143 680	139 630	134 230	123 130	112 730	104 050	94 960	86 930	79 530	72 780	71 510	150 000	3 550
	L2	149 400	147 730	143 230	134 680	123 720	116 950	107 180	98 060	90 340	82 440	75 500	71 710	71 220	70 730		
	L3	147 110	134 740	123 340	113 680	104 100	95 450	91 560	86 420	79 650	72 700	71 500	71 020	70 530	70 050		2 240
	L4	124 120	113 720	104 110	95 240	87 140	80 260	78 770	73 630	71 790	71 110	70 630	70 140	69 670	69 190		
105	L1	149 730	138 720	129 140	121 440	115 470	111 380	110 360	110 360	104 220	93 560	86 600	79 660	72 900	71 630	150 000	3 550
	L2	131 490	123 940	117 560	112 790	110 360	110 360	107 370	98 230	89 850	82 580	75 630	71 830	71 340	70 850		
	L3	117 610	114 230	111 160	110 360	104 280	95 610	91 710	86 570	79 790	72 830	71 630	71 140	70 650	70 170		2 240
	L4	111 170	110 360	103 750	95 400	87 280	80 400	78 900	73 760	71 910	71 230	70 750	70 260	69 780	69 310		
115	L1	149 400	149 400	148 610	144 040	139 820	128 890	118 510	108 880	100 640	91 840	83 920	75 900	70 620	69 170	150 000	3 550
	L2	149 400	148 100	142 490	130 810	120 180	112 880	104 030	95 000	87 040	79 030	71 580	69 770	68 340	66 930		
	L3	141 350	130 800	120 000	109 260	98 860	89 400	86 120	81 350	75 360	70 600	69 170	67 750	66 360	65 000		2 240
	L4	119 910	110 470	100 020	90 210	81 260	75 840	72 850	69 660	68 830	67 860	66 630	65 260	63 930	62 620		
135	L1	149 400	149 400	148 810	144 230	140 000	129 060	118 670	109 020	100 770	91 960	84 030	76 000	70 710	69 260	150 000	3 550
	L2	149 400	148 290	142 670	130 980	120 330	113 030	104 170	95 120	87 150	79 140	71 680	69 860	68 420	67 020		
	L3	141 540	130 970	120 160	109 400	98 990	89 520	86 240	81 460	75 460	70 700	69 260	67 840	66 450	65 090		2 240
	L4	120 070	110 610	100 150	90 330	81 370	75 940	72 940	69 750	68 920	67 950	66 710	65 350	64 010	62 700		
146	L1	133 080	133 070	133 070	129 440	118 650	109 630	100 570	92 170	85 130	77 910	71 590	65 760	60 430	58 380	150 000	3 550
	L2	133 070	130 360	119 510	110 320	101 430	95 610	87 700	80 420	74 320	68 050	62 590	58 810	55 120	53 520		
	L3	120 140	110 160	101 050	93 260	85 620	78 780	75 210	69 250	65 900	60 380	58 380	54 180	53 060	51 980		2 240
	L4	101 450	93 050	85 390	78 400	72 020	66 310	62 970	58 870	56 920	54 260	53 160	52 070	51 120	50 070		
172	L1	133 210	133 210	133 210	129 580	118 770	109 750	100 680	92 260	85 220	77 990	71 670	65 830	60 500	58 440	150 000	3 550
	L2	133 210	130 490	119 630	110 430	101 530	95 710	87 790	80 500	74 390	68 120	62 650	58 870	55 180	53 580		
	L3	120 260	110 280	101 160	93 360	85 700	78 860	75 290	69 320	65 960	60 440	58 440	54 230	53 120	52 030		2 240
	L4	101 550	93 150	85 480	78 480	72 090	66 380	63 030	58 930	56 980	54 320	53 220	52 130	51 170	50 120		

1) Maximum input speed valid for continuous duty cycle.

Note: When approval is required by DNV, please contact us.

Motor size IEC	d_M× P	Y	1)	Train of gears 3WL Dimension h	Code
132	38×300	445	553	133,5	**I38×300**
160	42×350	573	640	159	**I42×350**
180	48×350	613	734	159	**I48×350**
200	55×400	654	734	159	**I55×400**
225	60×450	710	–	189	**I60×450**
250	65×550	735	–	189	**I65×550**
280	75×550	819	–	189	**I75×550**

I ...

EP cat.

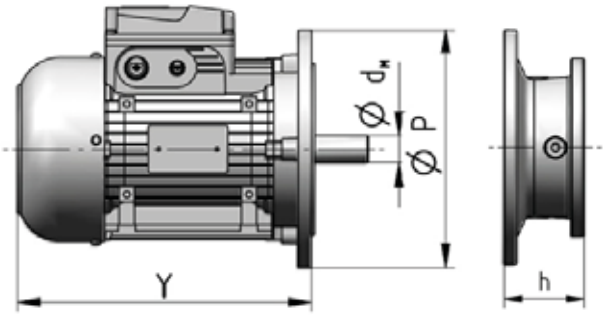

PB90 brake



Radial loads $F_{r1\ adm}$ admitted on high speed shaft end of **Inline** gear reducers.

n_1 × L_h	3WL A	B	C
900 000	28 000	19 000	14 000
1 120 000	26 500	18 000	13 200
1 400 000	25 000	16 000	12 500
1 800 000	22 400	15 000	11 200
2 240 000	21 200	14 000	10 600
2 800 000	20 000	13 200	9 500
3 550 000	18 000	11 800	9 000
4 500 000	17 000	11 200	8 500
5 600 000	16 000	10 600	7 500
7 100 000	14 000	9 500	7 100
9 000 000	13 200	9 000	6 700
11 200 000	12 500	8 000	6 000
14 000 000	11 200	7 500	5 600
18 000 000	10 600	7 100	5 300
22 400 000	10 000	6 700	4 750
28 000 000	9 000	6 000	4 500
35 500 000	8 500	5 600	4 250
45 000 000	8 000	5 300	3 750

C ...

EP cat.

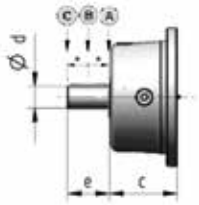

Train of gears	d	e	c	Code
3WL	60	105	138	**C60×105**

Note: For “type J” inputs, no radial loads are allowed.

D550M1 F10h

Splined shaft connection

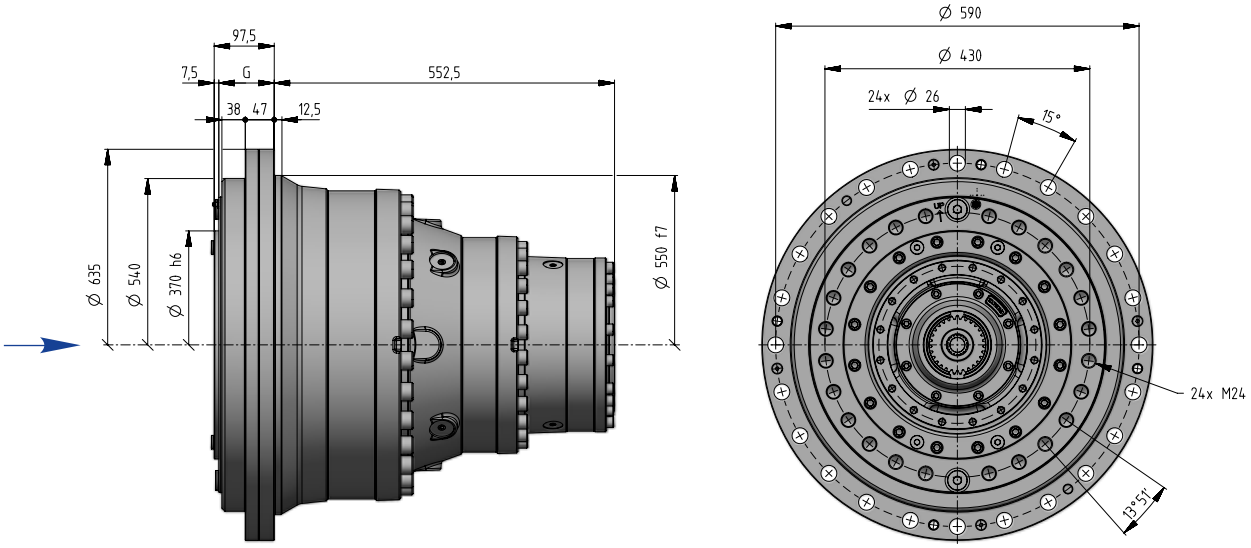

Cylindrical input shaft J60x105

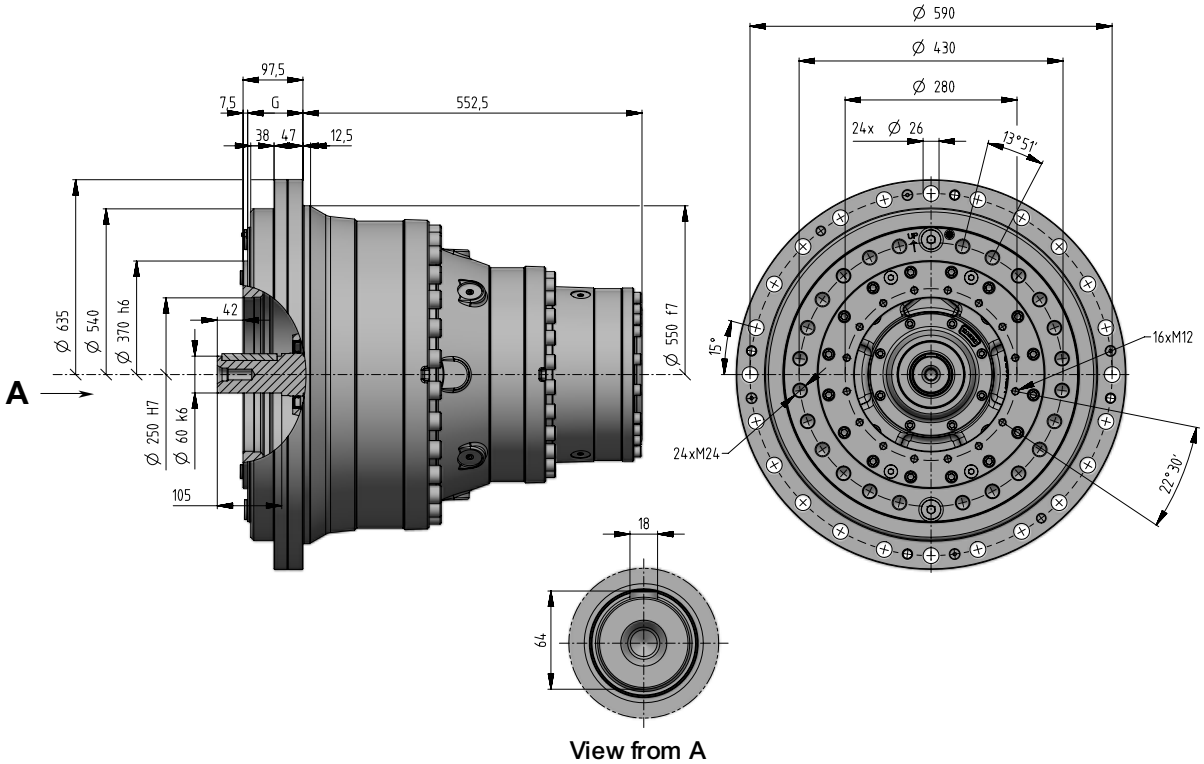

View from A

Clearance	G
G0	90
G1	88,5±1,5

kg	Input options Code								
	I38×300	I42×350	I48×350	I55×400	I60×450	I65×550	I75×550	C60x105	J60x105
3WL	530	537	537	539	549	556	557	539	513

blank page

2

030A
042A
060A
085A
125A

blank page

Class of utilization [h]									
T0	T1	T2	T3	T4	T5	T6	T7	T8	T9
200	400	800	1 600	3 200	6 300	12 500	25 000	50 000	100 000

3WL 125		$M_{N2\ FEM}$ [N m] $n_2 \times L_h$													$M_{2\ STATIC}$	n_{1peak} n_{1max} [1)]
Ratio	Load Spectrum	400	800	1 600	3 200	6 300	12 500	25 000	50 000	100 000	200 000	400 000	750 000	1 500 000	3 000 000	N m	min^{-1}
60,4	L1	211 400	211 400	206 490	192 610	181 460	173 150	161 520	147 760	136 260	124 490	114 200	104 700	95 810	94 130	212 000	2 800
	L2	209 030	196 300	185 170	175 980	162 450	153 380	140 430	128 540	118 600	108 430	99 430	94 390	93 750	93 110		
	L3	182 940	176 690	161 820	149 170	136 680	125 440	120 490	113 600	104 890	95 710	94 130	93 480	92 840	92 210		*2 240*
	L4	162 750	149 010	136 490	125 080	114 680	105 710	103 740	96 980	94 520	93 600	92 970	92 330	91 700	91 070		
71,9	L1	211 400	211 400	211 400	205 510	191 530	176 770	161 950	148 150	136 620	124 820	114 500	104 980	96 070	94 380	212 000	3 150
	L2	211 400	210 360	192 500	177 520	162 880	153 780	140 800	128 880	118 920	108 720	99 700	94 650	94 000	93 350		
	L3	193 620	177 220	162 250	149 570	137 050	125 780	120 810	113 900	105 170	95 970	94 380	93 730	93 090	92 450		*2 240*
	L4	163 180	149 410	136 860	125 420	114 990	105 990	104 020	97 240	94 770	93 850	93 210	92 570	91 940	91 310		
84,2	L1	211 400	211 400	211 400	205 930	191 920	177 130	162 270	148 450	136 890	125 080	114 730	105 190	96 260	94 570	212 000	3 150
	L2	211 400	210 790	192 890	177 870	163 210	154 090	141 080	129 140	119 160	108 940	99 900	94 840	94 190	93 540		
	L3	194 010	177 570	162 580	149 870	137 320	126 030	121 050	114 130	105 380	96 160	94 570	93 920	93 280	92 640		*2 240*
	L4	163 510	149 710	137 130	125 670	115 220	106 210	104 230	97 440	94 960	94 040	93 400	92 760	92 130	91 500		
91,4	L1	211 400	211 400	211 400	206 130	192 100	177 300	162 430	148 590	137 030	125 200	114 850	105 290	96 350	94 660	212 000	3 550
	L2	211 400	210 990	193 080	178 050	163 370	154 250	141 220	129 270	119 270	109 040	100 000	94 930	94 280	93 630		
	L3	194 200	177 750	162 730	150 010	137 460	126 150	121 170	114 240	105 490	96 260	94 660	94 010	93 370	92 730		*2 240*
	L4	163 670	149 860	137 270	125 790	115 330	106 310	104 330	97 530	95 060	94 130	93 490	92 850	92 220	91 590		
107	L1	211 400	211 400	211 400	206 460	192 410	177 580	162 690	148 830	137 250	125 400	115 030	105 460	96 510	94 810	212 000	3 550
	L2	211 400	211 330	193 390	178 330	163 630	154 490	141 450	129 470	119 460	109 220	100 160	95 080	94 430	93 780		
	L3	194 510	178 030	162 990	150 250	137 680	126 350	121 360	114 420	105 650	96 410	94 810	94 160	93 520	92 880		*2 240*
	L4	163 930	150 100	137 490	125 990	115 520	106 480	104 500	97 690	95 210	94 280	93 640	93 000	92 360	91 730		
126	L1	175 670	162 870	152 010	143 290	136 710	132 340	132 090	132 090	122 380	108 130	102 090	99 920	96 640	94 940	212 000	3 550
	L2	154 950	146 200	139 040	133 850	132 090	132 090	126 910	114 960	105 560	100 790	98 670	95 210	94 530	92 520		
	L3	139 730	135 710	132 240	132 090	128 880	120 400	109 990	104 930	102 520	96 540	94 940	93 690	91 700	89 760		*2 240*
	L4	132 560	132 090	121 110	114 420	108 890	104 270	102 770	97 820	95 340	94 050	92 080	90 130	88 220	87 620		
136	L1	172 760	172 760	172 760	168 680	154 540	142 640	130 860	119 810	110 560	101 070	92 790	85 150	78 180	75 840	212 000	3 550
	L2	172 760	169 770	155 520	143 320	131 840	124 330	113 950	104 400	96 390	88 150	81 000	76 060	71 710	69 720		
	L3	156 380	143 280	131 320	121 130	111 100	102 150	97 380	90 070	85 360	78 110	75 840	70 530	69 150	67 790		*2 240*
	L4	131 930	120 920	110 880	101 710	93 340	85 880	81 790	76 670	74 140	70 660	69 290	67 930	66 720	65 410		
160	L1	172 950	172 950	172 950	168 870	154 710	142 800	131 000	119 950	110 690	101 180	92 900	85 250	78 270	75 930	212 000	3 550
	L2	172 950	169 960	155 690	143 480	131 990	124 470	114 080	104 510	96 500	88 250	81 090	76 140	71 790	69 800		
	L3	156 550	143 430	131 470	121 260	111 220	102 260	97 490	90 170	85 450	78 190	75 930	70 610	69 220	67 870		*2 240*
	L4	132 080	121 060	111 000	101 820	93 450	85 970	81 880	76 750	74 230	70 740	69 370	68 010	66 790	65 480		

1) Maximum input speed valid for continuous duty cycle.

Note: When approval is required by DNV, please contact us.

Motor size IEC	d_M× P	Y	1)	Train of gears 3WL Dimension h	Code
132	38×300	445	553	133,5	I38×300
160	42×350	573	640	159	I42×350
180	48×350	613	734	159	I48×350
200	55×400	654	734	159	I55×400
225	60×450	710	–	189	I60×450
250	65×550	735	–	189	I65×550
280	75×550	819	–	189	I75×550

I ...

EP cat.

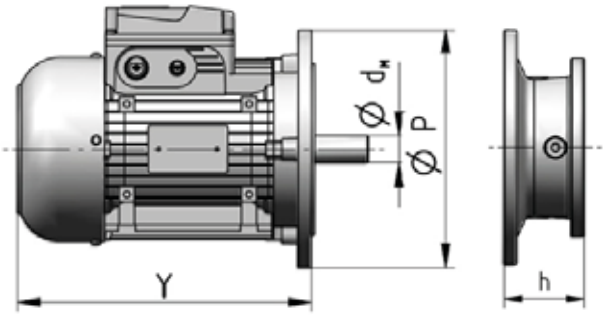

PB90 brake



Radial loads $F_{r1\ adm}$ admitted on high speed shaft end of **Inline** gear reducers.

n_1 × L_h	3WL A	3WL B	3WL C
900 000	28 000	19 000	14 000
1 120 000	26 500	18 000	13 200
1 400 000	25 000	16 000	12 500
1 800 000	22 400	15 000	11 200
2 240 000	21 200	14 000	10 600
2 800 000	20 000	13 200	9 500
3 550 000	18 000	11 800	9 000
4 500 000	17 000	11 200	8 500
5 600 000	16 000	10 600	7 500
7 100 000	14 000	9 500	7 100
9 000 000	13 200	9 000	6 700
11 200 000	12 500	8 000	6 000
14 000 000	11 200	7 500	5 600
18 000 000	10 600	7 100	5 300
22 400 000	10 000	6 700	4 750
28 000 000	9 000	6 000	4 500
35 500 000	8 500	5 600	4 250
45 000 000	8 000	5 300	3 750

C ...

EP cat.

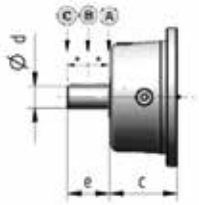

Train of gears	d	e	c	Code
3WL	60	105	138	C60×105

Note: For “type J” inputs, no radial loads are allowed.

D580M1 F10i

Splined shaft connection

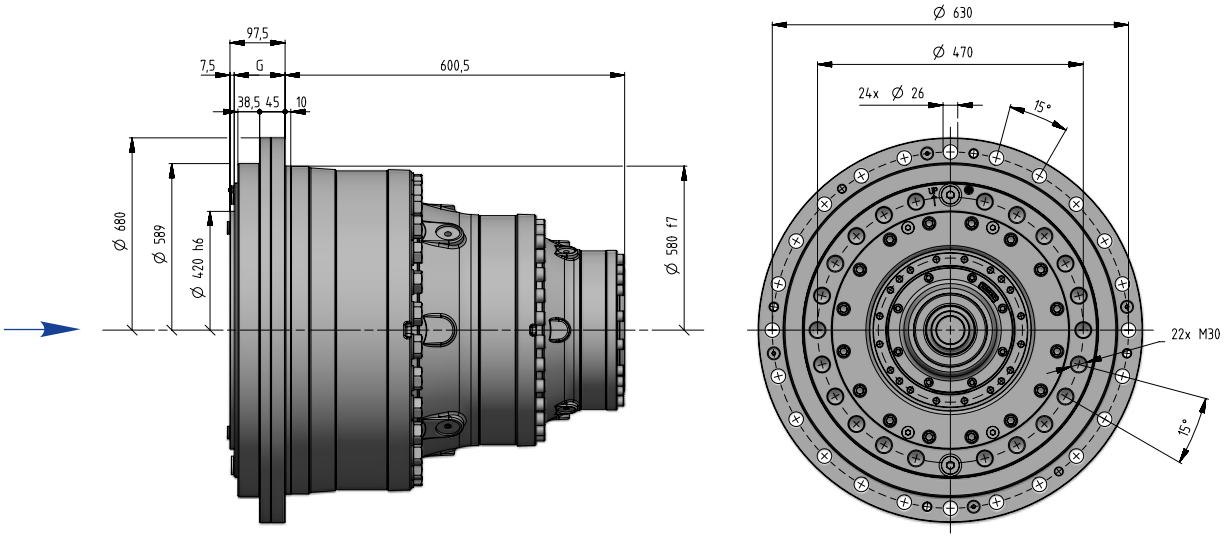

Cylindrical input shaft J60x105

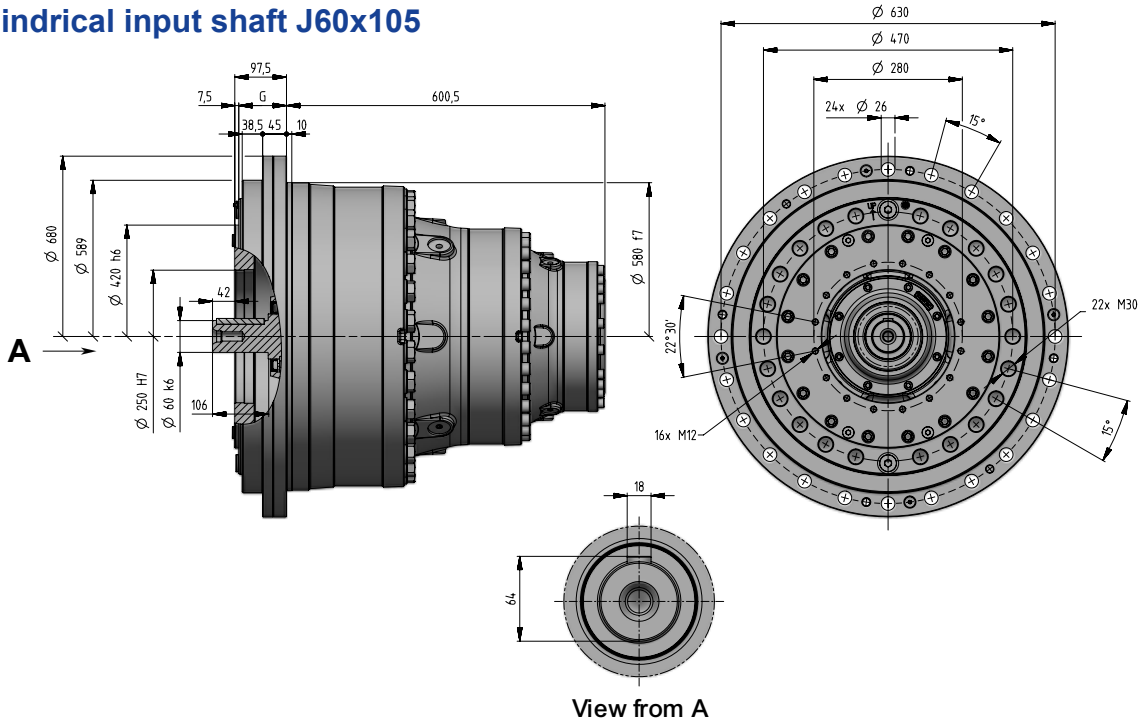

View from A

Clearance	G
G0	90
G1	88,5±1,5

kg	Input options Code								
	I38×300	I42×350	I48×350	I55×400	I60×450	I65×550	I75×550	C60x105	J60x105
3WL	701	707	707	709	719	726	727	709	683

3

Inputs, options and cooling systems

Index

Input flange dimensions	62
Hydraulic motor input flange dimensions	63
Optional painting	66
NEMA	67
PB series - Parking brakes	68
Independent cooling units	73
Oil temperature probe Pt100	75
Miscellaneous	75

Input flange dimensions

Input

IEC electric motor adapter

I... x ...

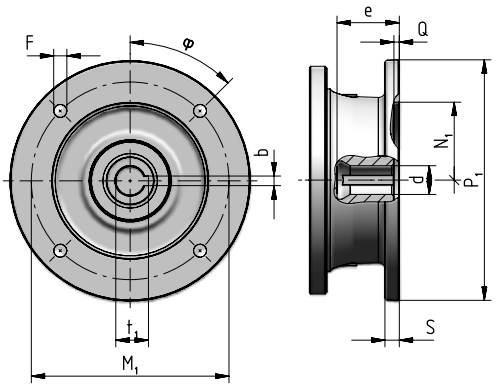

Motor size IEC	Code	P_1 ∅	S	d ∅	e max	b F9	t_1	M_1	F ∅		φ	N_1 ∅ G7	Q
100	**I28×250**	250	14	28 F6	62	8	31,3	215	14	(n.4)	45°	180	5
112	**I28×250**	250	14	28 F6	62	8	31,3	215	14	(n.4)	45°	180	5
132	**I38×300**	300	14	38 F6	82	10	41,3	265	14	(n.4)	45°	230	5
160	**I42×350**	350	15	42 F6	113	12	45,3	300	18	(n.4)	45°	250	6
180	**I48×350**	350	15	48 F6	113	14	51,8	300	18	(n.4)	45°	250	6
200	**I55×400**	400	15	55 E6	113	16	59,3	350	18	(n.4)	45°	300	6
225	**I60×450**	450	18	60 E6	143	18	64,4	400	18	(n.8)	22,5°	350	6
250	**I65×550**	550	18	65 E6	142	18	69,4	500	18	(n.8)	22,5°	450	6
280	**I75×550**	550	18	75 E6	142	20	79,9	500	18	(n.8)	22,5°	450	6

Input

Universal flange adapter

U

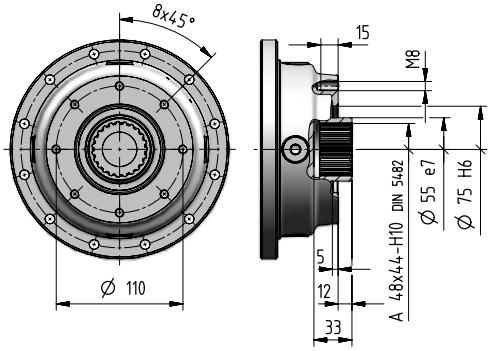

Input

Gear reducer cylindrical shaft end ---- **Shaft length**

C... x ...

Suggested mating dimensions

C48 x 82

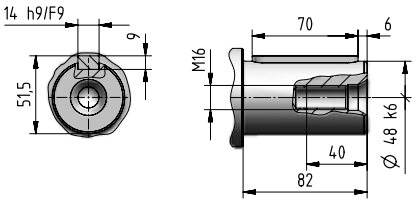

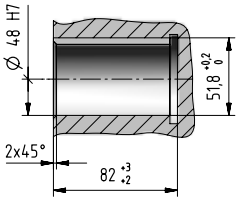

C60 x 105

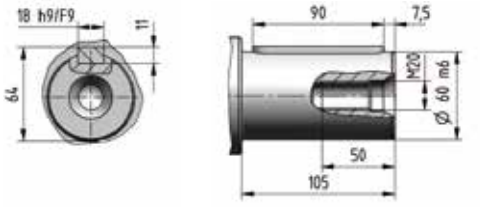

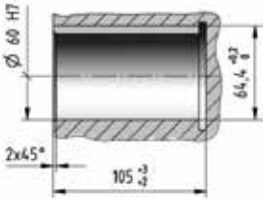

Hydraulic motor input flange dimensions

The available hydraulic motor adapters are shown in the tables below.
It's important to always check the coupling dimensions shown in the following pages.
Lots of alternative solutions are available on request.

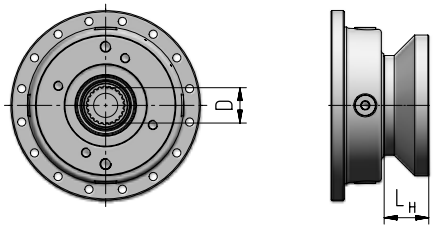

Brand	PARKER HANNIFIN dimension L_H																				
Model	F11		F12										TE-TJ-TF					TF-TG			
Size	10 - 19	14 - 19	30	30	30	40 - 60	40 - 60	60	90	90	90	125	-	-	-	-	-	-	-	-	-
D	16/32-13T	25,4	25,4	16/32-13T	30x2x14	31,75	12/24-14T	35x2x16	40	12/24-17T	40x2x18	45x2x21	25	25,4	25,4	1" 6B	1" 6B	31,75	31,75	32	12/24-14T
Code	UH SB3	UH SB13	UH SB13	UH SB3	UH IB1	UH SC6	UH SC4	UH IC2	UH ID4	UH SC5	UH ID2	UH IE1	UH SA1	UH SA11	UH SA13	UH SA10	UH SA2	UH SA12	UH SA6	UH SA5	UH SA4
	56	48	48	56	42	39,5	39,5	53	128	39,5	98	111	35	47	47	35	35	47	47	47	47

Brand	BOSCH REXROTH dimension L_H												
Model	A2FM												
Size	56,63	80,90	80,90	80,90	107,125	160,180	10,12,16	10,12,16	10,12,16	10,12,16	23,28,32	23,28,32	45,56
D	35x2x16	40	35x2x16	40x2x18	45x2x21	50x2x24	20	25	20x1,25x14	25x1,25x18	25	30x2x14	30x2x14
Code	UH IC2	UH ID4	UH ID1	UH ID2	UH IE1	UH IF1	UH IA1	UH IA2	UH IA3	UH IA4	UH IB6	UH IB1	UH IC1
	53	128	53	98	111	116	40	40	40	40	54,5	42	53

Brand	EATON dimension L_H						
Model	2000					4000	
Size	80 - 490	80 - 490	80 - 490	80 - 490	80 - 490	110 - 625	110 - 625
D	25,4	31,75	31,75	32	12/24-14T	31,75	12/24-17T
Code	UH SA11	UH SA12	UH SB12	UH SA5	UH SA4	UH SB14	UH SC5
	47	47	48	47	47	56	47

Brand	WHITE HYDRAULICS dimension L_H							
Model	RS	HB						
Size	200 - 201	300	300	300	300	300	300	300
D	25,4	25	25,4	25,4	31,75	31,75	1" 6B	16/32-13T
Code	UH SB13	UH SA1	UH SA13	UH SB13	UH SA6	UH SB12	UH SA2	UH SB11
	48	35	47	48	47	48	35	56

Brand	SAUER DANFOSS dimension L_H						
Model	OMP - OMR				OMH - OMS		OMT
Size	25 - 400	25 - 400	25 - 400	25 - 400	80 - 500	81 - 500	160 - 500
D	25	25,4	32	1" 6B	32	12/24-14T	40
Code	UH SA1	UH SA11	UH SA5	UH SA10	UH SA5	UH SA4	UH IC3
	35	47	47	35	47	47	135

Brand	SAI dimension L_H	
Model	GM	
Size	1	05
D	28 UNI 221	28 UNI 221
Code	UH M11	UH M01
	22	40

Flanges for SAI motors

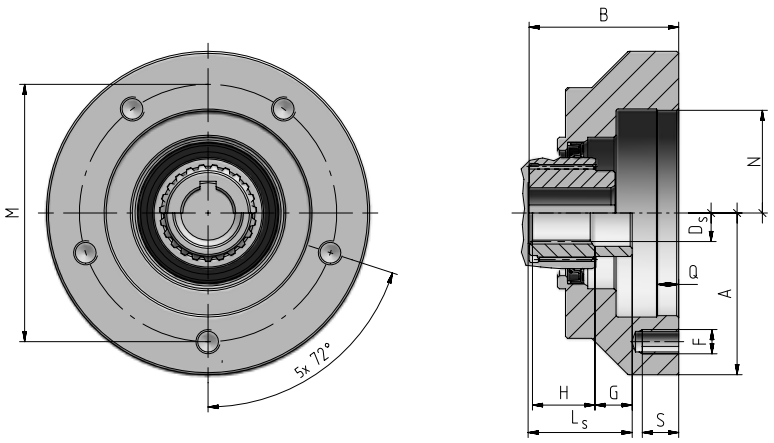

A Ø	B	N H6 Ø	D_S Ø	F	G	H	L_S	S	Q	M	Code	kg
179	61	125	28 UNI 221	M10	10	22	32	12	14	160	**UH M01**	3,1
229	43	175	28 UNI 221	M12	10	22	32	15	6	210	**UH M11**	4,2

Similar to SAE J744c (SAE - A) standards

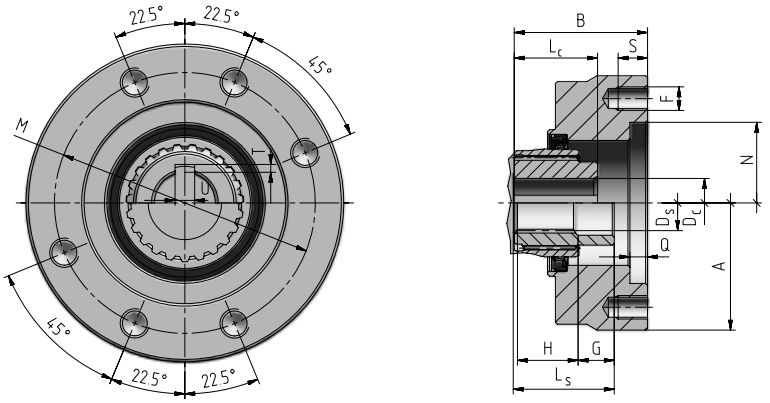

A Ø	B	N G7 Ø	D_C Ø	D_S Ø	F	G	H	L_C	L_S	S	Q	M	U	T	Code	kg
130	56	82,55	25 E8	–	M12	–	–	42,5	–	15	9	106,4	8	3,2	**UH SA1**	2,7
130	56	82,55	–	1" 6B	M12	0	29	–	29	15	9	106,4	–	–	**UH SA2**	2,6
130	68	82,55	–	12/24-14T	M12	19	32	–	51	15	9	106,4	–	–	**UH SA4**	3,6
130	68	82,55	32 G7	–	M12	–	–	55,5	–	15	9	106,4	10	3,4	**UH SA5**	3,6
130	68	82,55	31,75 G6	–	M12	–	–	51	–	15	9	106,4	8	3,4	**UH SA6**	3,6
130	56	82,55	–	1"6B	M12	0	25	–	25	15	9	106,4	–	–	**UH SA10**	2,6
130	68	82,55	25,4 E6	–	M12	–	–	53	–	15	9	106,4	6,38	3	**UH SA11**	3,7
130	68	82,55	31,75 G6	–	M12	–	–	56	–	15	9	106,4	8	3,8	**UH SA12**	3,7
130	68	82,55	25,4 E6	–	M12	–	–	58	–	15	9	106,4	6,38	3	**UH SA13**	3,8

Similar to SAE J744c (SAE - B) standards

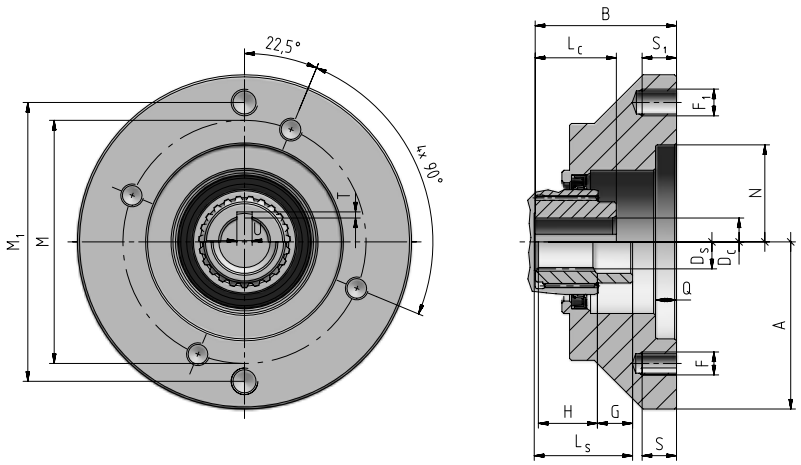

A Ø	B	N H6 Ø	D_C Ø	D_S Ø	F	F_1	G	H	L_C	L_S	S	S_1	Q	M	M_1	U	T	Code	kg
175	77	101,6	–	16/32-13T	M12	M14	–	31	–	67	18	18	11	127,3	146	–	–	**UH SB3**	6,3
175	77	101,6	–	16/32-13T	M12	M14	–	31	–	47	18	18	11	127,3	146	–	–	**UH SB11**	6,1
175	69	101,6	31,75 G6	–	M12	M14	–	–	56	–	18	18	11	127,3	146	8	3,8	**UH SB12**	5,5
175	69	101,6	25,4 E6	–	M12	M14	–	–	58	–	18	18	11	127,3	146	6,38	3	**UH SB13**	5,7
175	77	101,6	31,75 G6	–	M12	M14	–	–	56	–	18	18	11	127,3	146	8	3,8	**UH SB14**	6,0

Similar to SAE J744c (SAE - C) standards

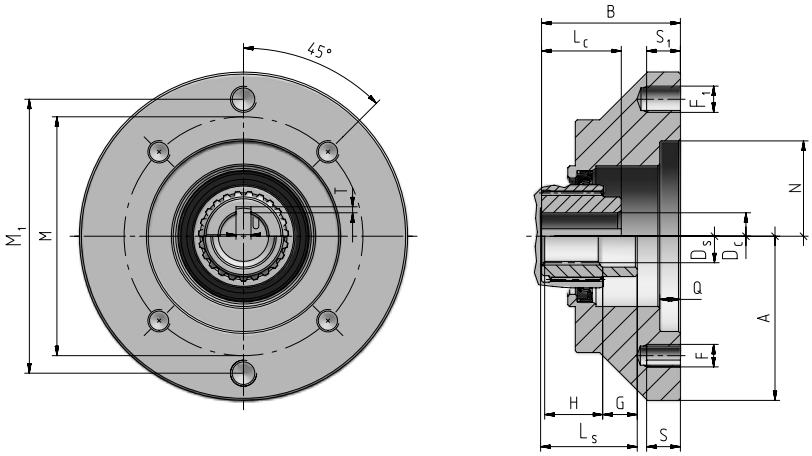

A Ø	B	N G7 Ø	D_C Ø	D_S Ø	F	F_1	G	H	L_C	L_S	S	S_1	Q	M	M_1	U	T	Code	kg
207	60,5	127	–	12/24-14T	M14	M16	19	32	–	51	15	15	17,5	162	181	–	–	**UH SC4**	4
207	68	127	–	12/24-17T	M14	M16	–	30	–	30	15	15	17,5	162	181	–	–	**UH SC5**	4
207	60,5	127	31,75 G6	–	M14	M16	–	–	51	–	15	15	17,5	162	181	8	3,8	**UH SC6**	4

Similar to ISO 3019-2 standards

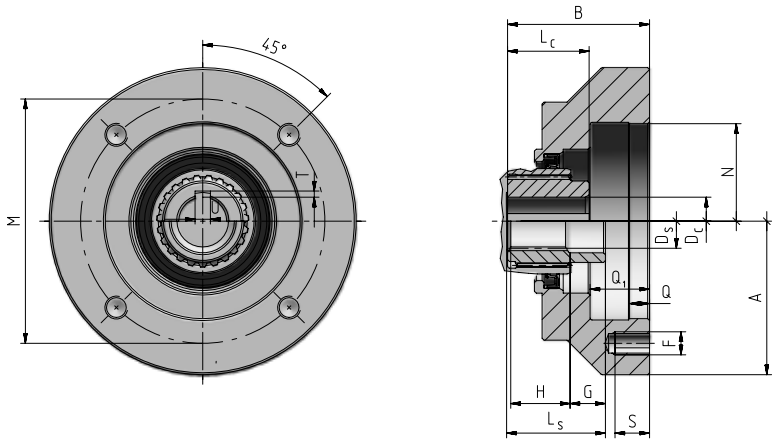

A Ø	B	N Ø	D_C Ø	D_S DIN 5480 Ø	F	G	H	L_C	L_S	S	Q	Q_1	M	U	T	Code	kg
130	61	80 H7	20 E6	–	M8	–	–	40	–	20	7	20	100	6	2,8	**UH IA1**	3,2
130	61	80 H7	25 E6	–	M8	–	–	40	–	20	7	20	100	8	3,3	**UH IA2**	3,2
130	61	80 H7	–	20×1,25×14	M8	11	24	–	40	20	7	20	100	–	–	**UH IA3**	3,2
130	61	80 H7	–	25×1,25×18	M8	5	24	–	40	20	7	20	100	–	–	**UH IA4**	3,2
149	63	100 H6	–	30×2×14	M10	–	35	–	35	15	9	25	125	–	–	**UH IB1**	3,2
149	63	100 H6	25 E6	–	M10	–	–	50	–	15	9	25	125	8	3,3	**UH IB3**	3,4
149	75,5	100 H6	25 E6	–	M10	–	–	50	–	15	9	25	125	8	3,3	**UH IB6**	4,3
179	74	125 H6	–	30×2×14	M12	–	35	–	35	25	8	31,5	160	–	–	**UH IC1**	4,6
179	74	125 H6	–	35×2×16	M12	–	40	–	40	25	8	31,5	160	–	–	**UH IC2**	4,6
184	115	125 H6	40 H6	–	M12	–	–	78	–	18	10	51	160	12	3,3	**UH IC3**	16,5
206	74	140 H7	–	35×2×16	M12	–	40	–	40	15	11	29	180	–	–	**UH ID1**	4,7
206	78,5	140 H7	–	40×2×18	M12	–	37,5	–	37,5	15	11	32	180	–	–	**UH ID2**	14,7
206	108	140 H7	40 H6	–	M12	–	–	78	–	15	11	29	180	12	3,3	**UH ID4**	11,9
238	91	160 G7	–	45×2×21	M16	–	42	–	42	24	12	40	200	–	–	**UH IE1**	12,6
257	96	180 H7	–	50×2×24	M16	–	44	–	44	26	11	40	224	–	–	**UH IF1**	26

Optional painting

The gearmotors are protected externally with a two-component water-borne acrylic-polyurethane paint suitable for normal industrial environments (corrosivity class C3 L ISO 12944-2 and ISO 12944-1; **color blue RAL 5010**).

Other paints and protection degrees are available on request as per table below.

Field of use	Features	Corrosivity class ISO 12944-2	Durability class ISO 12944-2	Description treatment	Final thickness on machined parts ISO 19840 µm	Code
Applications in aggressive ambients	Good resistance to atmospheric and aggressive agents	C4	L	1) Stoving water-borne primer with epoxy esters 2) Two-component water-borne acrylic-polyurethane	≥ 160	**1HRAL5010 (blue)**
			M [2]	1) Stoving water-borne primer with epoxy esters 2) Two-component water-borne acrylic-polyurethane	≥ 180	**2HRAL5010 (blue)**
			H [3]	1) Stoving water-borne primer with epoxy esters 2) Two-component water-borne acrylic-polyurethane	≥ 240	**3HRAL5010 (blue)**
Outdoor applications in saline environment	Excellent resistance to atmospheric and aggressive agents	C5	M	1) Sandblasting 2) High zinc dual-compound anti-rust primer 3) Stoving water-borne primer with epoxy esters 4) Two-component water-borne acrylic-polyurethane	≥ 240	**2IRAL5010 (blue)**
			H [2]	1) Sandblasting 2) High zinc dual-compound anti-rust primer 3) Stoving water-borne primer with epoxy esters 4) Sealing with polyurethane sealant 5) Two-component water-borne acrylic-polyurethane	≥ 280	**2KRAL5010 (blue)**
Outdoor applications in chemically aggressive environment and high humidity industrial areas	Excellent resistance to atmospheric and aggressive agents	C5	M	1) Sandblasting 2) High zinc dual-compound anti-rust primer 3) Stoving water-borne primer with epoxy esters 4) Two-component, low VOC, high solids, fast-curing epoxy primer/finish	≥ 240	**2LRAL5010 (blue)**
			H [2]	1) Sandblasting 2) High zinc dual-compound anti-rust primer 3) Stoving water-borne primer with epoxy esters 4) Sealing with polyurethane sealant 5) Two-component, low VOC, high solids, fast-curing epoxy primer/finish	≥ 280	**2YRAL5010 (blue)**

2) Not available on motors.
3) For motors ,C4H possible with cycle 2H sp ≥ 180 µm.

NOTE: cycles with specific features are available on request.

NEMA

NEMA motor input flanges

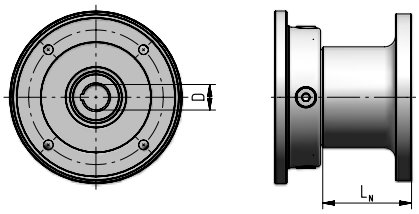

The available NEMA motor adapters are shown in the tables below.
They are suitable for NEMA C-FACE frame.
Other sizes are available on request.

143/145 TC 22,23 (7/8") **UN N14** L_N	**182/184 TC** 28,58 (1-1/8") **UN N18** L_N	**213/215 TC** 34,93 (1-3/8") **UN N21** L_N	**254/256 TC** 41,28 (1-5/8") **UN N25** L_N
34	50	116,5	116,5

Details

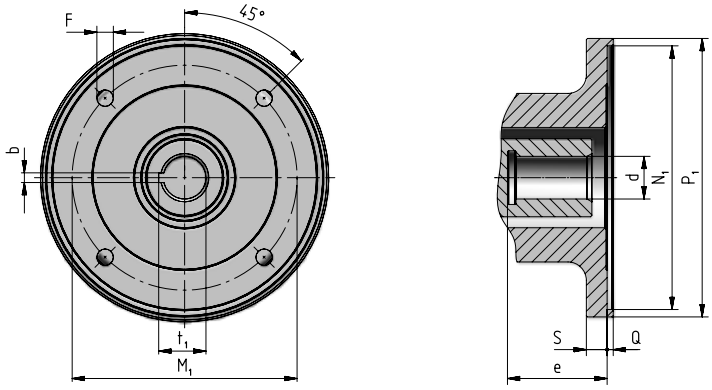

NEMA **C-face**	**P_1** Ø	**S**	**d** Ø E6	**e**	**b** 0 / +0,050	**t_1** 0 / +0,100	**M_1**	**F**	**N_1** Ø H7	**Q**	**Code**	kg
143/145 TC	168	9	22,23 (7/8")	50	4,78 (3/16")	24,4	149,22 (5-7/8")	10,5	114,3 (4-1/2")	5	**UN N14**	3.4
182/184 TC	228	16	28,58 (1-1/8")	71	6,35 (1/4")	31,5	184,15 (7-1/4")	13,5	215,9 (8-1/2")	5	**UN N18**	8
213/215 TC	228	17	34,93 (1-3/8")	81,5	7,94 (5/16")	38,7	184,15 (7-1/4")	13,5	215,9 (8-1/2")	5	**UN N21**	14.3
254/256 TC	228	17	41,28 (1-5/8")	97,5	9,53 (3/8")	45,6	184,15 (7-1/4")	13,5	215,9 (8-1/2")	5	**UN N25**	14.2

PB series - Parking brakes

Features

The parking brakes of PB series are spring applied and hydraulic released multi-disc brakes, to be used in combination with planetary gear reducers of EP series.

They are not service brakes and they cannot be used in dynamic conditions.

They are used to hold the load from application or to stop the machine in case of emergency.

The values of static braking torque M_{Bstat} given in the following table should be considered as nominal values and are valid for a brand new brake with correct lubrication. Values of M_{Bstat} are given with a tolerance of ± 10%.

After some braking cycles, values of static braking torque could reduce by 5% and 10%, due to the adjustment of discs.

ATTENTION: always verify that the static breaking torque M_{Bstat} referred to the gear reducer low speed shaft is lower than the value of M_{2MAX} allowed by the gear reducer itself.

Effects on the thermal power of the gear reducer

Generally, in the running conditions required by normal applications where an hydraulically released brake is present, the thermal power of the gear reducer is not exceeded.

Nevertheless, under some running conditions (high speed, continuous or frequent duty, it is possible that the normal brake operation generate a progressive overheating of the group, influencing the thermal power allowed by the gear reducer.

In these cases it is possible to adopt solutions to reduce overheating of the brake or increase the thermal power of the group by means of an integrated cooling system or an independent cooling unit.

Consult us for further information.

Speed limits

The presence of a SAHR brake does not limit the values of n_{1max} and n_{1peak} of the gear reducer stated in EP catalog.

ATTENTION: a continuous or frequent duty at high speed may generate an overheating of the group (previous paragraph).

Operating conditions

Brakes are designed for industrial applications, at ambient temperature -20 °C ÷ + 50 °C, maximum altitude 1 000 m. For operation at temperatures from -20 °C to 0 °C limit p_{max} to 200 bar.

Selection

Selection of a braking torque M_{Bstat} higher than the maximum moment required by application by a factor of 1.6 to 1.8 is recommended.

Technical data of PB parking brakes

PB10-…			0075	0150	0225	0340	0420	0525	0650	0815
Static braking torque	M_{Bstat}	[N m]	72	156	224	345	421	531	660	818
Min release pressure	p_{min}	[bar]	4,4	9,5	10,2	15,7	15,4	19,4	20,1	24,9
Release pressure	p	[bar]	6,9	14,9	16,1	24,7	24,2	30,4	31,6	39,1
Max. release pressure	p_{max}	[bar]	300							
Maximum speed	n_{1max}	[min^{-1}]	According to gear reducer n_{1max} and n_{1peak}							
Oil volume for brake release	V	[l]	0,10							

PB30-…			0250	0400	0500	0630	0800	1000	1250	1500	1700
Static braking torque	M_{Bstat}	[N m]	265	407	509	637	809	1 010	1 281	1 529	1 741
Min release pressure	p_{min}	[bar]	7,6	11,8	11,8	14,7	15,6	19,4	24,7	25,2	28,7
Release pressure	p	[bar]	12,0	18,5	18,5	23,1	24,5	30,5	38,7	39,6	45,1
Max. release pressure	p_{max}	[bar]	300								
Maximum speed	n_{1max}	[min^{-1}]	According to gear reducer n_{1max} and n_{1peak}								
Oil volume for brake release	V	[l]	0,12								

PB90-…			0850	1250	1500	1800	2100	2600	3000	3550	4250
Static braking torque	M_{Bstat}	[N m]	869	1 304	1 552	1 811	2 173	2 680	3 063	3 560	4 305
Min release pressure	p_{min}	[bar]	10,2	15,3	18,2	18,2	21,9	27,0	27,0	31,4	37,9
Release pressure	p	[bar]	15,3	23,0	27,4	27,4	32,8	40,5	40,5	47,1	56,9
Max. release pressure	p_{max}	[bar]	300								
Maximum speed	n_{1max}	[min^{-1}]	According to gear reducer n_{1max} and n_{1peak}								
Oil volume for brake release	V	[l]	0,25								

Different braking torques on request.

The above performances are provided with a back pressure equal to 0 bar, any counter pressures must be considered when sizing the system.

Functioning of PB parking brakes

Brake closed

When no pressure is applied to the brake (0 bar) springs (1) apply a force to the piston (2) which lock the discs (3) and produce a nominal braking torque equivalent to M_{Bstat}.

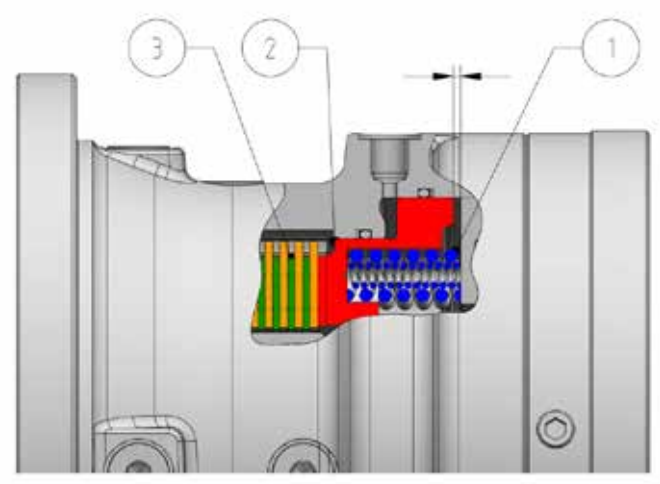

Brake opened

Above the pressure of 0 bar, the piston begins to compress the springs and the brake progressively reduces the braking torque. When the release pressure exceeds the value of p_{min} the brake begins to open; once reached the value p the brake is fully opened, the piston ends its displacement and the discs can rotate freely.

To ensure a long life of the brake, it is suggested to use a release pressure 50% above the value of p and in any case not higher than p_{max}.

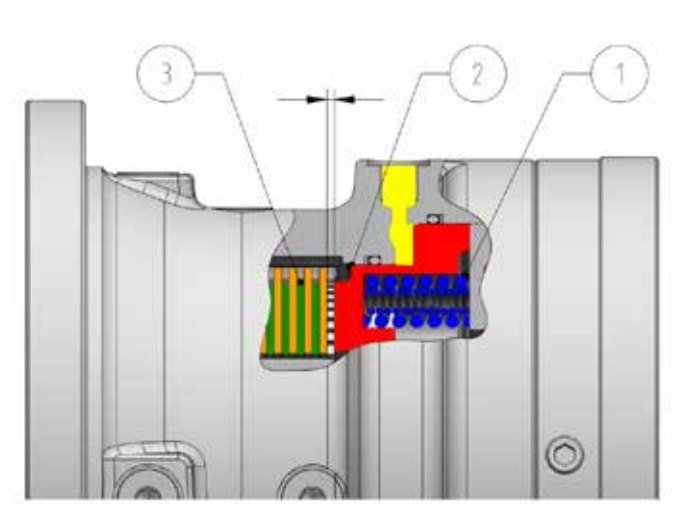

Input side details of PB parking brakes

PB10 (030/042/060)

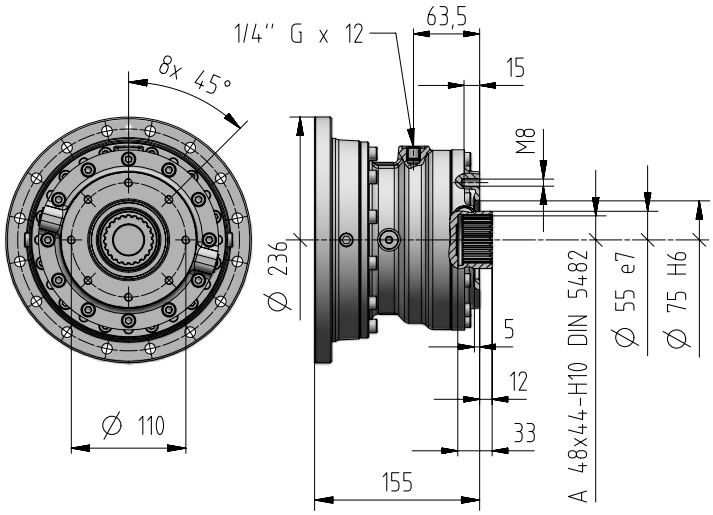

kg

20

PB30 (030/042/060)

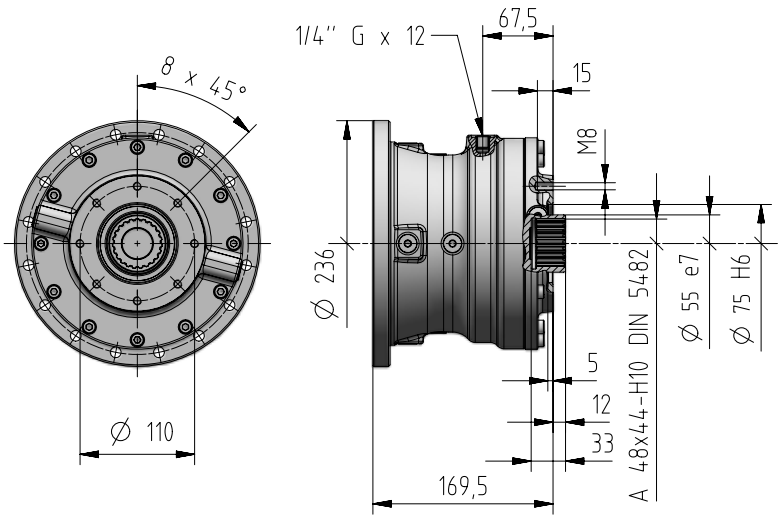

kg

25

PB90 (085/125)

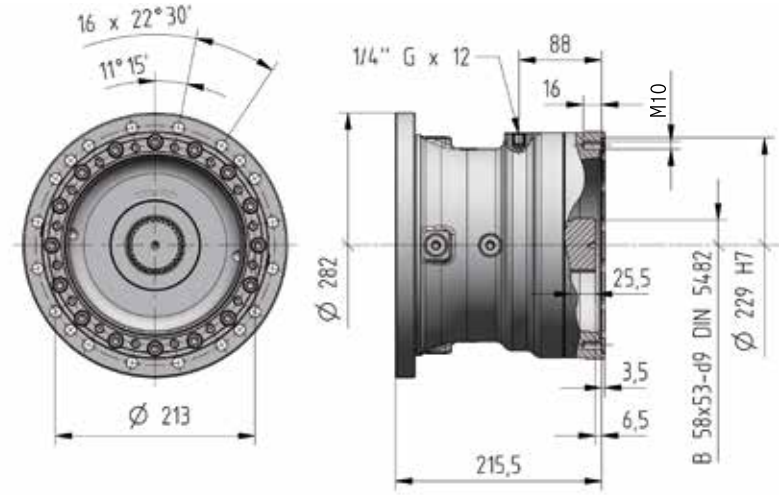

kg

53

Brake release

Unless otherwise stated, the brakes are mounted with the brake release hole in position 0 (see figure).
On request, positions 1, 2 and 3 are available.

Code for the **designation**: **,BR0 (standard) ,BR1 ,BR2 ,BR3**.

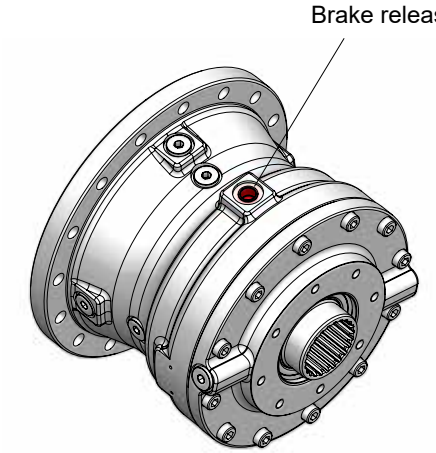

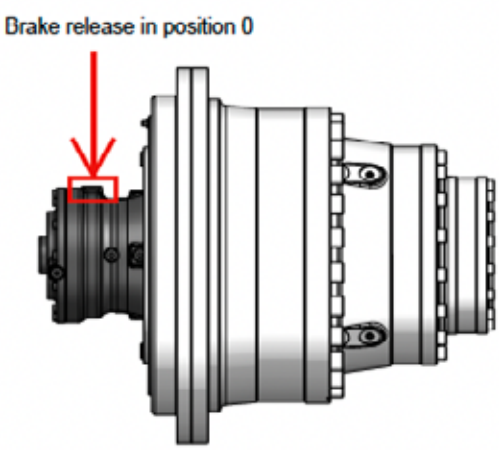

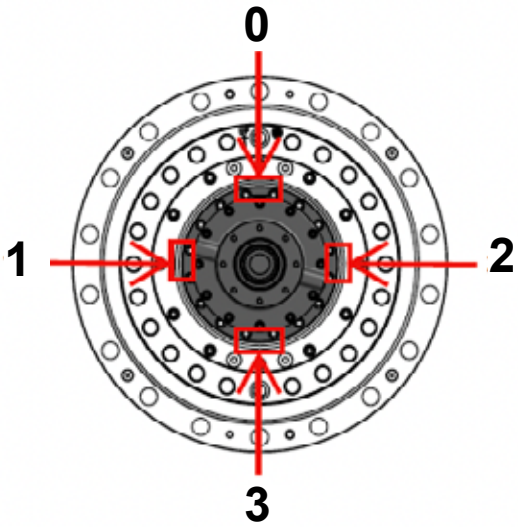

Independent cooling units

Independent cooling unit with oil-air heat exchanger **UR O/A ...**

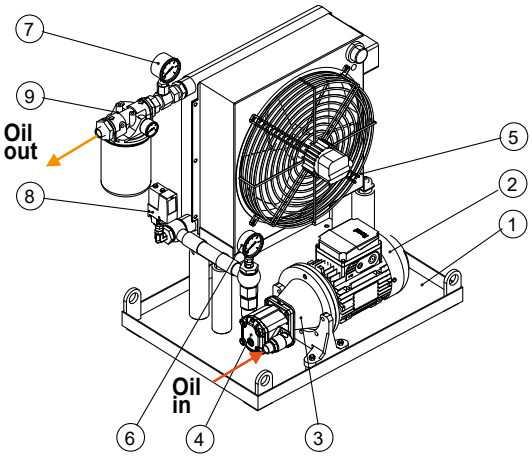

Pos.	Description
1	Basement
2	Electric motor
3	Coupling
4	Gear Pump
5	Heat Exchanger
6	Pressure Gauge
7	Thermometer
8	Pressure Switch
9	Output Filter

Independent cooling unit with oil-water heat exchanger **UR O/W ...**

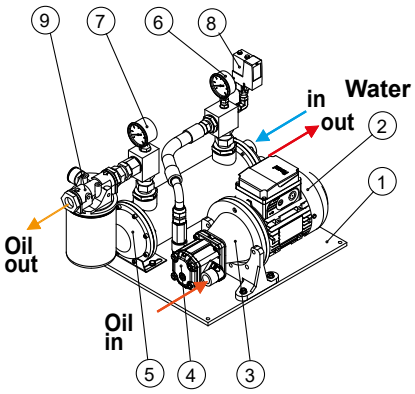

When natural cooling or integrated cooling units are not sufficient anymore (for thermal power verification see ch. 1), it is possible to install the independent cooling units described below.

Consisting of:

- **oil/air heat exchanger** (O/A; with thermostat and adjustable control knob 0 ÷ 90 °C) or **oil/water heat exchanger** (O/W)
- **motor pump**: screw or gear pump with fluoro rubber seals; 4 pole motor B3/B5 (three-phase Δ230 Y400 V 50 Hz); motor-pump connection with coupling
- **motor fan** (O/A) (three-phase supply Δ230 Y400 V 50 Hz or single phase supply 230 V 50, 60 Hz, see table)
    - **oil filter** (type Spin-On) with filtration degree 60µm (M60) and optical-electric blockage warning (BVR)
    - **analogic manometer** (0 ÷ 16 bar) mounted between pump and exchanger
    - **analogic thermometer** (0 ÷ 120 °C) mounted at exchanger output
    - **low pressure switch** (with on-off switch) mounted between pump and exchanger
    - **supporting frame** with nameplate

      On request, several accessories are at disposal (supplied separately, assembled by Customer) in order to satisfy all functionality and safety needs:
    - **oil temperature probe Pt100**
    - **2-threshold signalling device CT03** (necessary also the oil temperature probe Pt100) for the mounting on rail to DIN EN 50022
    - **3-threshold signalling device CT10** (necessary also the oil temperature probe Pt100) for the mounting on rail to DIN EN 50022
    - **bi-metal type thermostat**
    - **flow gauge**

      Connections realized by flexible pipes (type SAE 100 R1, maximum length 2 m) between gear reducer and cooling unit and the assembly of accessories and signalling devices are Buyer's responsibility.

      When choosing the independent cooling unit, it is good to make sure that the flow rate (liters / minute) does not exceed 50% of the volume of lubricant present inside the gear reducer, in the specific mounting position.

      Excellent performance reachable with air temperature at max 25 °C for UR O/A and water temperature at max 20 °C for UR O/W.

Operational features - UR O/A ... - EP

Designation	P_s	Air Oil Heat Exchanger	Oil motor pump		Air Oil heat Exchanger features						Oil filter type		kg
					Electric fan side			Oil side					
			Motor Power	Capacity	Power and motor type			Oil suction fem. conn.	Oil delivery fem. conn.	Oil vol.			
	[kW]		[kW]	[dm³/min]	kW [50Hz / 230V-400V]	kW [60 Hz / 265V-460V]	Phase number	n° and size	n° and size	[dm³]	Size and filtering	Optical pressure gauge	
URO/A 5 - EP	5	AP 300 E	0,75	6	0,12 / 0,20	0,15 / 0,23	1~	1× G 3/4"	1× G 3/4"	2	MPS 050 M60	BVR	60
URO/A 7 - EP	7	AP 300 E	0,75	9	0,12 / 0,20	0,15 / 0,23	1~	1× G 3/4"	1× G 3/4"	2	MPS 050 M60	BVR	64
URO/A 9 - EP	9	AP 300/2 E	0,75	11	0,12 / 0,20	0,15 / 0,23	1~	1× G 3/4"	1× G 3/4"	4	MPS 050 M60	BVR	70
URO/A 13 - EP	13	AP 430 E	1,1	16	0,11 / 0,21	0,11 / 0,20	3~	1× G 3/4"	1× G 3/4"	4	MPS 100 M60	BVR	75
URO/A 20 - EP	20	AP 430/2 E	1,1	20	0,11 / 0,18	0,15 / 0,26	3~	1× G 3/4"	1× G 3/4"	6	MPS 100 M60	BVR	115
URO/A 28 - EP	28	AP 580 EB	1,5	46	0,11 / 0,18	0,15 / 0,26	3~	2× G 3/4"	2× G 3/4"	12	MPS 100 M60	BVR	125
URO/A 40 - EP	40	AP 680 EB	1,5	46	0,70	1,1	3~	2×G 1"	2× G 1"	15	MPS 150 M60	BVR	140
URO/A 48 - EP	48	AP 730 EB	2,2	56	0,70	1,1	3~	2×G 1"	2×G 1"	15	MPS 150 M60	BVR	150

1) ***P***s performance valid for altitude from 0 to 1 000 m a.s.l. Reduce performance value ***P***s x 0.85 (from 1 000 to 2 500 m a.s.l.) or ***P***s x 0,71 (from 2 500 to 5 000 m a.s.l.)

Operational features - UR O/W ... - EP

Designation	P_s	Oil Water Heat Exchanger	Oil motor pump		Water Oil Exchanger features								Oil filter type		kg
					Water side				Oil side						
			Motor Power	Capacity	Capacity		Suction fem. conn.	Delivery fem. conn.	Oil suction fem. conn..	Oil delivery fem. conn.	Oil vol.				
	[kW]		[kW]	[dm³/min]	[dm³/min]		n° and size	n° and size	n° and size	n° and size	[dm³]		Size and filtering	Optical pressure gauge	
URO/W 4 - EP	4	T80 CB2	0,37	6	≥ 30	≤ 60	1× Ø17 - 1/2"	1× Ø17 - G1/2"	1× G 3/4"	1× G 3/4"	1,0		MPS 050 M60	BVR	14
URO/W 6 - EP	6	T80 CB3	0,37	6	≥ 30	≤ 80	1× Ø17 - 1/2"	1× Ø17 - G1/2"	1× G 3/4"	1× G 3/4"	1,6		MPS 050 M60	BVR	16
URO/W 9 - EP	9	T80 CB3	0,75	13	≥ 30	≤ 80	1× Ø17 - 1/2"	1× Ø17 - G1/2"	1× G 3/4"	1× G 3/4"	1,6		MPS 050 M60	BVR	20
URO/W 13 - EP	13	MS 134P1	1,1	20	≥ 60	≤ 110	1× G 1"	1×G 1"	1× G 3/4"	1× G 3/4"	2,8		MPS 100 M60	BVR	30
URO/W 20 - EP	20	MS 134P1	1,1	30	≥ 60	≤ 110	1× G 1"	1×G 1"	2× G 3/4"	2× G 3/4"	2,8		MPS 100 M60	BVR	32
URO/W 32 - EP	32	MS 134P2	1,5	40	≥ 80	≤ 110	1× G 1"	1×G 1"	2× G 1"	2× G 1"	4,6		MPS 150 M60	BVR	60
URO/W 48 - EP	48	MS 134P4	1,5	60	≥ 100	≤ 120	1× G 1"	1×G 1"	2× G 1"	2× G 1"	6,8		MPS 150 M60	BVR	75

Starting mode and required accessories

Ref.	T_{amb} °C	Required accessories	Required oil type	Description and remarks
A1	0 ÷ 25	Pt100 + CT10	Polyalphaolefine based synthetic oil or Mineral oil	**Gear reducer starting and subsequent motor-pump starting with warm oil.** The motor-pump is managed by the **three-threshold** oil temperature control system (Pt100 + CT10). Set the three-threshold device CT10 with: • operating temperature 60 °C (starting of motor-pump); • restoring temperature 40 °C; • warning temperature 90° C.
A2	> 25	–	Polyalphaolefine based synthetic oil	**Simultaneous starting of gear reducer and motor-pump**

Additional description when ordering by **designation**:
independent oil-air cooling unit UR O/A ... - EP or **independent oil-water cooling unit UR O/W ... - EP.**
For more details about reference starting mode A1 / A2, see specific literature.
For dimensions, accessories and further technical details, see specific literature.

Oil temperature probe Pt100

Remote oil temperature gauge; installation (at Buyer's responsibility) instead of an existing drain plug, or into a hole properly pre-arranged. The temperature gauge is realized with a thermo-resistor Pt100 having following features:

- platinum wire with 100 Ω at 0 °C according to EN 60751
- precision class B according to EN 60751
- operation temperature field -40 °C ÷ +200 °C
- max current 3 mA
- 3 wires connection according to IEC 751 (see fig. below)
- stainless steel probe AISI 316; diameter 6 mm
- cable 1 m long with free end

For the probe connection to relevant signalling device CT03 or CT10 (on request, consult us) use a protected section cable ≥ 1,5 mm² positioned separately from power cables.

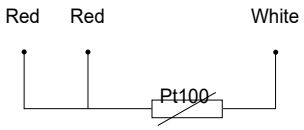

B	Ch (key)	D	L
8	22	G 3/8"	tbd
8	22	G 1/2"	tbd
10	32	G 3/4"	tbd

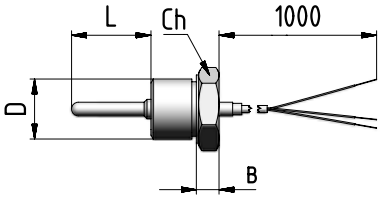

Miscellaneous

Oil temperature probe with terminal box and amperometric transducer 4 ÷ 20 mA

Remote oil temperature gauge, with terminal box and amperometric transducer; installation (at Buyer's responsibility) instead of drain plug. The temperature gauge is realized with a thermo-resistor Pt100 having following features:

- platinum wire with 100 Ω at 0 °C according to EN 60751
- precision class B according to EN 60751
- temperature range -40 °C ÷ +200 °C
- 3 wires connection according to IEC 751 (see fig. below)
- stainless steel probe AISI 316; diameter 6 mm
- amperometric transducer with output signal 4 ÷ 20 mA
- alluminium terminal block (supplied without cable gland)
- protection IP65
- input cables G ½''

For the probe connection to relevant signalling device use a protected section cable ≥ 1,5 mm² positioned separately from power cables.

ATTENTION. Accessory available only for technical feasibility evaluation by Rossi S.p.A.: consult us.

B	Ch (key)	b	D
90	24	60	G 3/8"
90	24	60	G 1/2"
92	32	62	G 3/4"

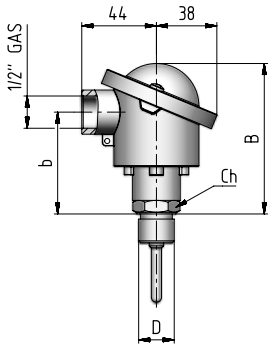

4

Installation and maintenance

Index

General information	78
Operating conditions	79
How supplied	80
Lifting, handling and storage	82
Installation	84
Universal flange adapter	88
Motor mounting or replacement	89
Oil quantitties	90
Lubrication	94
Maintenance	100
Troubles: causes and corrective actions	101
Technical formulae	102
Symbols and units of measure	104
Icons	106

General information

Important:
The gear reducers supplied by Rossi S.p.A. are intended to be incorporated in finished appliances or systems and **it is forbidden to start them up until the appliance, or the system in which the component, has been incorporated has been declared compliant:**

- **with Machinery Directive 2006/42/EC and subsequent updates; in particular, any accident prevention protections for unused shaft ends and any accessible fan cover passages (or other) shall be the responsibility of the Buyer;**
- **with "Electromagnetic Compatibility (EMC)" Directive 2004/108/EC and subsequent updates.**

This document provides information on the handling, installation, and maintenance of planetary gear reducers. Personnel working with these products should carefully read and strictly apply all of the following instructions. The information and data contained in this document reflect the technical level reached at the time of printing. Rossi reserves the right to make, without prior notice, any changes deemed appropriate for product improvement.

Recycling



Keep in mind applicable requirements:
- the housing elements, gears, shafts and bearings of the gear reducer shall be transformed into scrap steel. Cast iron elements will undergo the same treatment subject to other specific performance
- waste oils must be recovered and treated in accordance with applicable law requirements

Safety

The paragraphs marked with the following symbols contain provisions that must be strictly observed in order to ensure the safety of persons and prevent major damage to the machine or system



- Electrical hazard
- Surface temperature above 50 °C
- Moving parts during operation
- Warning



- Do not use for lifting



- Lifting point



Warning!
We recommend that you follow all instructions in this catalog, all applicable regulations regarding proper installation, as well as all applicable safety regulations. In the event of hazards for persons or property, connected with the possibility that the gear reducer or parts of it fall or are projected, provide appropriate safety measures (accident prevention protections) against:
- **loosening or breaking of the fastening screws**
- **rotation or sliding of the driven shaft resulting from accidental failure of the reaction constraint**
- **accidental breakage of the driven shaft**
- **unprotected moving or rotating parts that characterize the connection with the machine** (e.g. shaft ends and accessories such as shrink disc, stop washer, splined bush, splined bar, wheel flange)

If an abnormal event occur (temperature rise, unusual vibration or noise, etc.) stop the machine immediately.

Installation safety

Improper installation, misuse, removal of guards, disconnection of protective devices, lack of inspection and maintenance, improper connections, can cause serious personal injury or property damage.

The component must be handled, installed, commissioned, operated, inspected, maintained and repaired exclusively by qualified and specifically trained personnel, provided with the necessary experience to recognize possible risks associated with these products and avoid possible emergency situations.
The gear reducers in this catalogue are normally intended for use in industrial areas: additional guards that may be necessary must be put in place and ensured by the persons responsible for the installation.



Warning! Special design components may feature details other than those described and may require additional information.



Warning! For installation, use and maintenance of electric motors (standard, self-braking or special ones) or of variable speed drives and/or electrical power supply equipment (frequency converter, soft-start, etc.), and/or of accessories (e.g.: flow switch, autonomous cooling unit, thermostat etc.), see the specific documentation attached thereto. Request it if necessary.

Maintenance safety

Any operation on the gear reducer or its components must be carried out with the **machine stopped, disconnected from the power supply, and after cooling down:** disconnect the motor (including auxiliary equipment) from the power supply, the gear reducer from the load, and ensure that the safety systems against unintentional start-up have been activated and, if necessary, provide mechanical locking devices (to be removed before commissioning).

Warning!
During operation, the gear reducers may have **hot surfaces**; always wait until the gear reducer or gearmotor has cooled down before performing any operation.
Further technical documentation can be found on the website www.rossi.com.

Warning!
For any clarification and/or information, please contact Rossi S.p.A. specifying all data found on the identification plate.

Operating conditions

Gear reducers are suitable to operate at ambient temperature 0 °C ÷ +40 °C (with peaks -20 °C ÷ +50 °C), with standard seal rings and components.

The operation outside this range, with a minimum of -40 °C and a maximum of +60 °C, must be evaluated in relation to the specific operating conditions, duty cycle, type of lubricant, type of seals and cooling/heating system (where possible); please contact Rossi S.p.A.

Allowed operational and storage ambient temperature in relation to lubricant type [1)]

		Synthetic Lubricant	Mineral Lubricant
Ambient Temperature T_{amb}	**Running conditions**		
	Minimum ambient temperature	-20 °C	-10 °C
	Maximum ambient temperature	+50 °C	+40 °C
	Storage condition		
	Minimum ambient temperature of storage condition	-10 °C	-10 °C
	Maximum environment temperature of storage condition	+50 °C	+50 °C
Oil Temperature T_{oil}	Minimum oil temperature for partial load starting condition [2)]	-20 °C	-10 °C
	Minimum oil temperature for full load starting condition	-10 °C	-5 °C
	Maximum nominal stabilized oil temperature allowed in continuous running condition (S1)	+95 °C	+95 °C [3)]
	Maximum peak and occasional oil temperature allowed with intermittent duty only	+110 °C	+110 °C

1) For selection of lubricant and optimal viscosity according to temperature T_{amb} and in case of independent lubrication unit, refer to ch. 4 (Lubrication). For starts and services with T_{oil} < 0 °C , consider higher absorption on the electric motor according to the type of lubricant.
2) If full load service is required, provide gradual starting and stopping ramps, avoiding overloads and shocks.
3) For temperature value of T_{oil} > 75 °C and < 95 °C it is recommended to use oils with at least viscosity grade 30 cSt at 95 °C.

How supplied

Name plate

Every gear reducer is provided with a name plate in anodized aluminium containing main information necessary for a correct identification of the product; the name plate must not be removed and must be kept integral and readable. All name plate data must be specified on eventual spare part orders.

Assembled by Rossi Italy

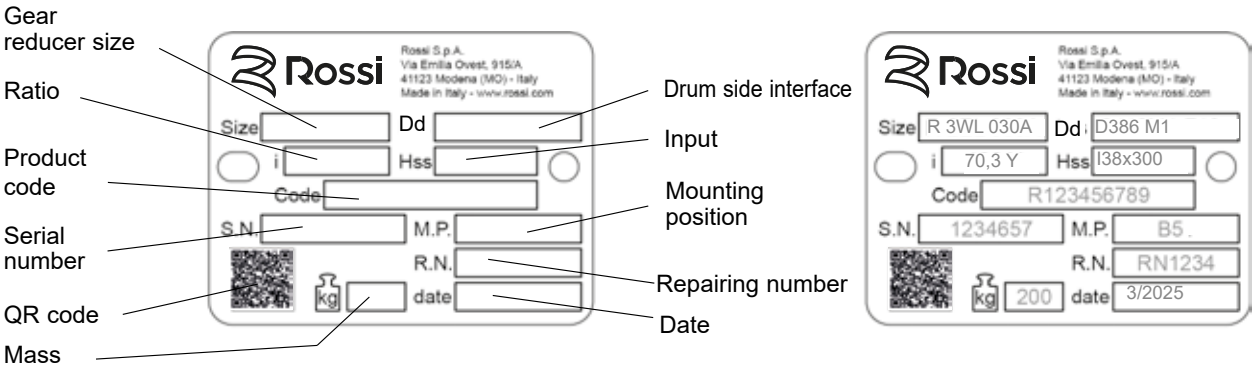

Assembled by subsidiaries

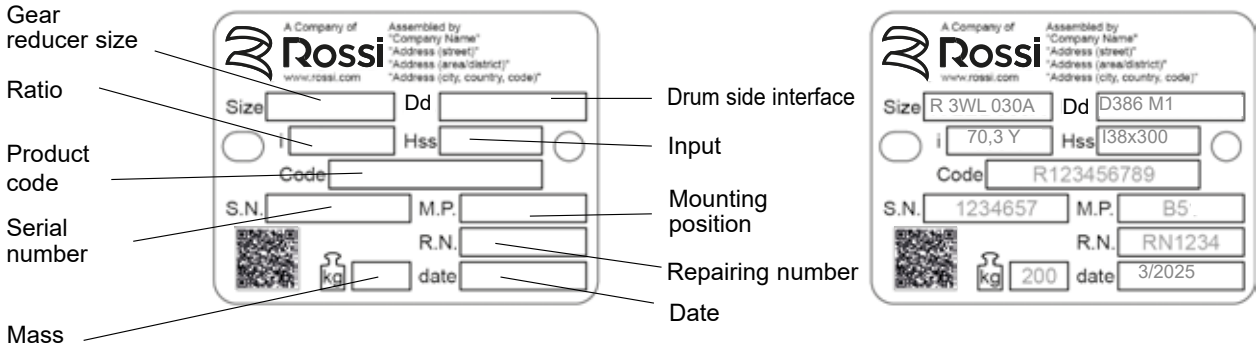

Nameplate of PB parking brake

Every brake is provided with a name plate in anodized aluminium containing main information necessary for a correct identification of the product; the name plate must not be removed and must be kept integral and readable. All name plate data must be specified on eventual spare part orders.

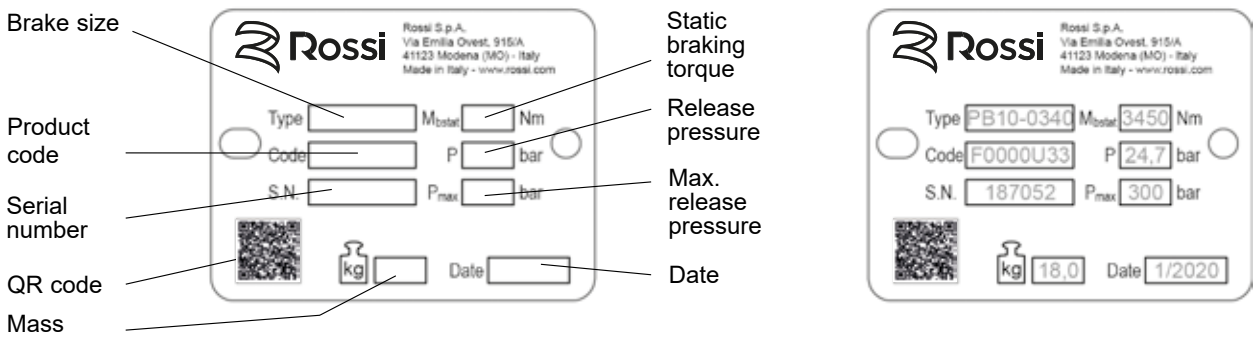

Standard painting

Internal painting	External painting		Notes
	Final color Blue RAL 5010	Features	
Single-compound ester epoxy or phenolic resin basis primer (prepainted)	Single-compound ester epoxy or phenolic resin basis primer (prepainted) + Two component water borne acrylic polyurethane finish	Resistant to atmospheric and aggressive agents (atmospheric corrosivity category C3 L according to ISO 12944-1 and ISO 12944-2).	The internal painting does not resist polyglycol synthetic oils (polyalphaolefines synthetic oils are suitable). Remove by a scraper or solvent the possible paint of gear reducer coupling surfaces

Protections and packing

Overhanging free shaft ends are treated with protective anti-rust long life oil.

All internal parts are protected with protective anti-rust oil. Unless otherwise agreed in the order, products are adequately packed: on pallet, protected with a polyethylene film, wound with adhesive tape and strap (bigger sizes); in carton pallet, wound with adhesive tape and strap (smaller sizes); in carton boxes wound with tape (for small dimensions and quantities).

If necessary, gear reducers are conveniently separated by means of anti-shock foam cells or of filling cardboard.

Generally the packing is suitable for the normal road/rail transport. For sea transport it is necessary to foresee a special packing, when ordering.

Before handling or transporting the gear reducers, be sure that the packing is in good conditions and suitable for the transport. Do not stock packed products on top of each other.

Lifting, handling and storage

Lifting and handling operations must be carried out by qualified and specifically trained personnel and in compliance with safety regulations.

Receipt

Upon receipt verify that the unit corresponds to the one ordered and has not been damaged during the transport.
In case of damages, report them immediately to the courier.
Avoid commissioning gear reducers, that are even slightly damaged. Report any non-compliance to Rossi.

Lifting and handling

First make sure that the lifting equipment (e.g. crane, hook, eye bolt, straps etc.) is suitable for the weight and size of the gear reducer (the weight of the product are given in the name plate). When lifting, use only the attachment point marked in the following figures.
Pay attention to avoid lifting (max 15° during handling) and, if necessary, use additional straps only to balance the load.
Do not use front threads at the input shaft ends to lift the gear reducers.

Warning!
- Suspended load can fall
- Do not stand under the load
- Improper transport may result in damage to the gear reducer

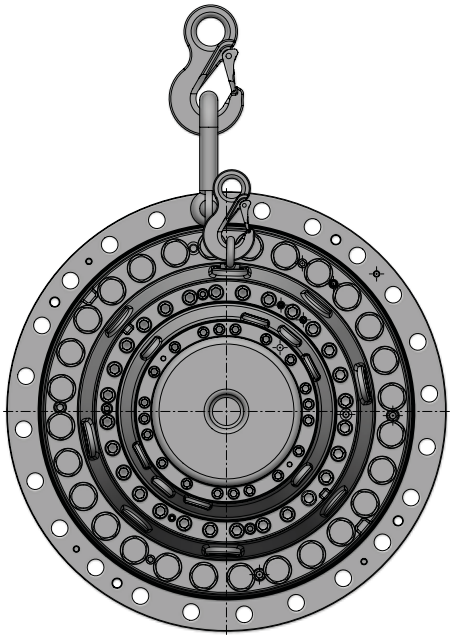

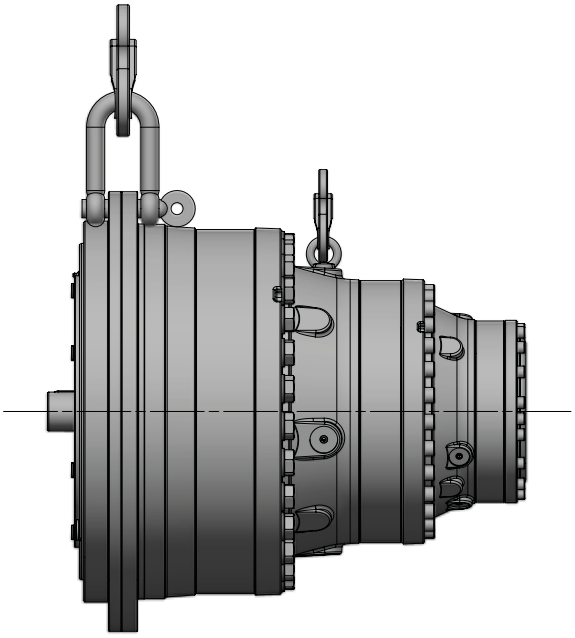

Storage

Environment should be sufficiently clean, dry and free from excessive vibrations (v_{eff} ≤ 0,2 mm/s) to avoid damage to bearings (excessive vibration should also guarded during transit, even if within wider range) and ambient storage temperature should be 0 ÷ +40 °C; peaks of 10 °C above and below are acceptable (see also operating condition ch. 4).

The gear reducer filled with oil must be positioned according to the mounting position mentioned on the name plate.

Every six months rotate the shafts (some revolutions are sufficient) to prevent damage to bearings and seal rings.

In normal environments and provided there has been adequate protection during transport, the product is provided for a storage period of up to 1 year.

For a 2 year storage period in normal environment it is necessary to pay attention also to the following instructions:

- generously grease the sealing, the shafts and the unpainted machined surfaces, if any, and periodically control conservation state of the protective anti rust oil
- completely fill the gear reducers with lubrication oil

For storages longer than 2 years or in aggressive environment or outdoors, consult Rossi S.p.A..

Installation

General

To ensure the correct operation of the winch prior to assembly, clean and degrease the conctat and centering surfaces which must be paint-free and preferably processed with a machine tool.

Support structure and drums must be developed to ensure appropriate rigidity for the unit, to prevent deformation and misalignment when fixing to the reduction gear.

For the correct orientation of the gearbox, please refer to the UP marking visible on the front, which have to be on the top of the gearbox.

Before the installation:

- verify that there are no damages on shafts and on mating surfaces
- check that all the nameplate data (see page 10) correspond to what requested
- check that internal clearance (model G0 or G1) is the one requested by the application (see the next page)
- verify that design is suitable to the environment (temperature, atmosphere, etc.)
- be sure that the structure on which gear reducer is fitted is plane, levelled and strong enough in order to assure fitting stability and vibration absence (vibration speed $\boldsymbol{v}_{eff} \leq 3{,}5$ mm/s for $\boldsymbol{P}_N < 15$ kW and $\boldsymbol{v}_{eff} \leq 4{,}5$ mm/s for $\boldsymbol{P}_N > 15$ kW are acceptable), keeping in mind all transmitted forces due to the masses, to the torque, to the radial and axial loads
- avoid any obstruction to the air flow; heat sources near the gear reducer that might affect the temperature of cooling air and of gear reducer (for radiation); insufficient air recycle and applications hindering the steady dissipation of heat
- verify that the gear reducer housing is dust-free in order to achieve an efficient heat dissipation
- gear reducers and gearmotors should be protected, whenever possibile and by appropriate means, from solar radiation and extremis of weather
- mating surfaces (of gear reducer and machine) must be clean and sufficiently rough to provide a good friction coefficient (indicatively *R*a 1,6 ÷ 3,2 µm). Remove by a scraper or solvent the eventual paint of gear reducer on coupling surfaces and, especially in presence of external radial loads or torque required $\boldsymbol{M}_2 \geq 0{,}7 \times \boldsymbol{M}_{N2}$, apply **locking adhesives**
- when external loads are present use pins or locking blocks, if necessary

Before wiring-up the gearmotor make sure that motor voltage corresponds to input voltage. If direction of rotation is not as desired, invert two phases at the terminals.

Y-Δ starting should be adopted for no-load starting (or with a very small load) and for smooth starts, low starting current and limited stresses, if requested.

If overloads are imposed for long periods or if shocks or danger of jamming are envisaged, then motor-protection, electronic torque limiters, fluid couplings, safety couplings, control units or other similar devices should be fitted.

Protection of the motor with a thermal cut-out is recommended. Where duty cycles involve a high number of on-load starts, it is necessary to utilise **thermal probes** for motor protection (fitted on the wiring); magnetothermic breaker is unsuitable since its threshold must be set higher than the motor nominal current of rating.

Connect thermal probes, if any, to auxiliary safety circuits.

Use varistors and/or RC filters to limit voltage peaks due to contactors.

- For accessories not supplied by Rossi pay attention to their correct dimensioning; if necessary consult us.



Warning!

Bearings life, safe shaft and coupling running depend on precise alignment of the shafts.

Carefully align the gear reducer with the motor and the driven machine (with the aid of shims if need be), interposing flexible couplings whenever possible.

Whenever a leakage of lubricant could cause heavy damages, increase the frequency of inspections and/or envisage appropriate control devices (e.g.: remote oil level gauge, lubricant for food industry, etc.).

In polluting environment, take suitable precautions against lubricant contamination through seal rings or other.

For brake or special motors, consult us for specific information.

Screws and tightening torques

The performance of the gearbox indicated in ch. 2 is calculated considering the use of class 10.9 fastening screws tightened to their respective class.

We recommend the use of class 10.9 screws.

It is the customer's responsibility to limit the maximum performance required according to the class of use of the chosen screw, as indicated in the table. The suggested tightening torque value are valid for an estimated friction coefficient of μ = 0,14 typical for lightly oiled steel bolts, black annealed or phosphatised and dry, cut mating threads in steel or cast iron.

Do not use lubricants altering the friction coefficient for they may overload the screw connection.

Always use dynamometric wrench or similar and verify the tightening torque after the first hours of running.

Tightening torque [N m]

	Class	
	8.8	**10.9**
Ø	$M_2 < 70\%\ M_{n2}$	
M10	50	70
M12	85	120
M16	210	300
M20	400	560
M24	690	1000
M30	1380	1950

To ensure correct winch functioning, the winch frame and the drum must be made in such a way that the dimensions shown in the figure are within the specified tolerances. The winch supports must be perfectly aligned to avoid pulling the frame out of shape once the gearbox is fixed to it. The winch frame must ensure adequate rigidity.

All contact surfaces between the winch and the gearbox must be perfectly clean and degreased prior to installation of the gearbox.

Internal clearance type configuration

EP Winch gear reducers are available in two versions:

- Without internal clearance (model G0);
- With internal clearance (model G1), only for installation in pairs at opposite ends of the same drum.

In all applications, gearboxes require a minimum of axial clearance between the drum-gearbox assembly and the winch frame.

Installation with only one EP Winch unit - without internal clearance (G0)

The drum shoulder bearing on the opposite side to the gearbox always has to be axially free, to avoid overloads.

Opposite side bearing is not in the scope of supply.

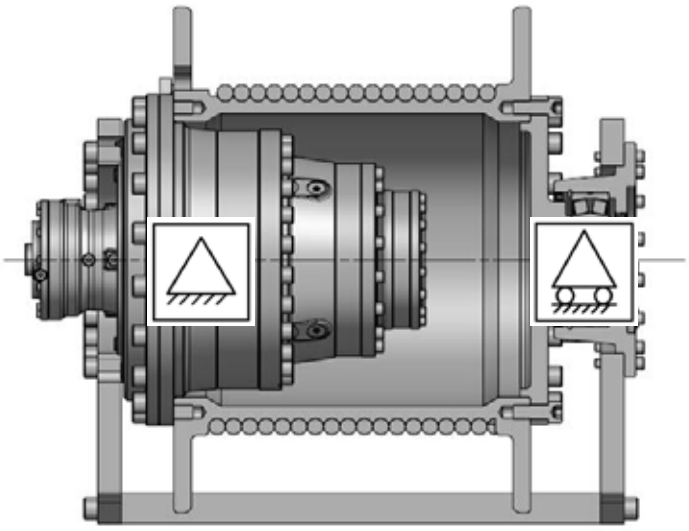

Installation with two EP Winch units - with internal clearance (G1)

If you need to install gearboxes in pairs at opposite ends of the same drum, and you cannot install the winch in a way that leaves the drum-gearbox assembly free to move both rotationally and axially, you must use “G1” option.

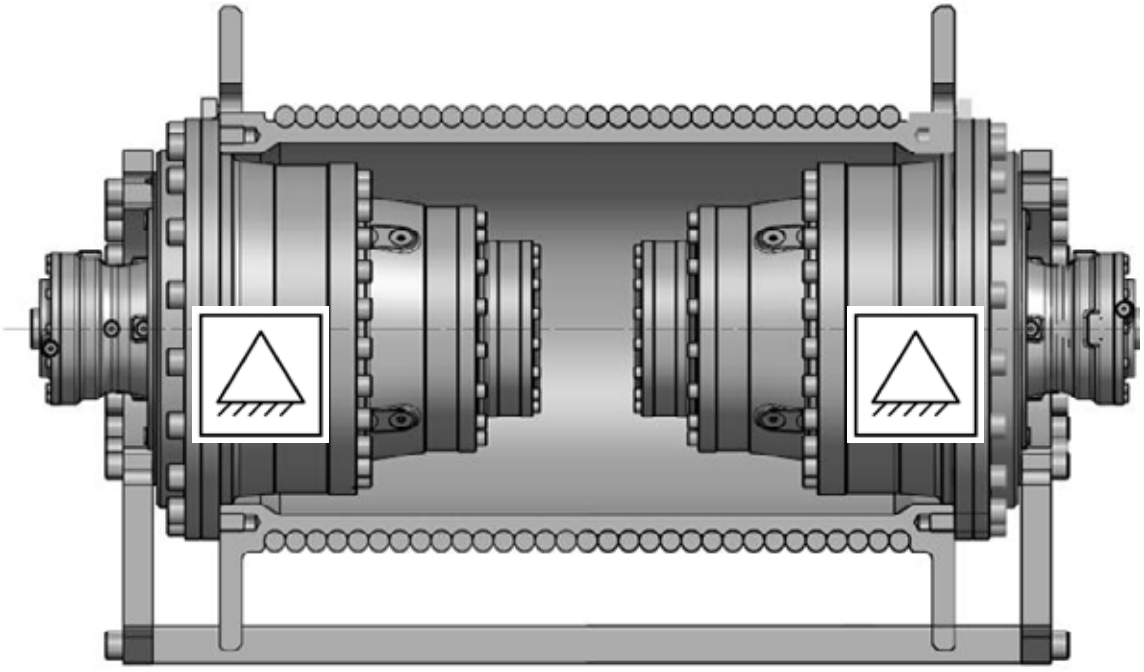

Drum mounting

To ensure correct winch functioning, the winch frame and the drum must be made in such a way that the dimensions shown in the figure are within the specified tolerances. The winch supports must be perfectly aligned to avoid pulling the frame out of shape once the gearbox is fixed to it. The winch frame must ensure adequate rigidity.

All contact surfaces between the winch and the gearbox must be perfectly clean and degreased prior to installation of the gearbox. For splined couplings apply proper lubricants. In the case of gearboxes with IEC input, in some cases the external diameter of the IEC flange may be greater than the centering diameter of the frame.

In this case, it is necessary to disassemble the IEC input to allow the frame to be correctly mounted on the gearbox.

This operation can be easily performed without causing oil leakage.

Before mounting the IEC input to the gearbox, grease the splined connection with KOP-FLEX grease and tighten the screws to the specified torque.

Before mounting, pay attention to clean carefully mating surfaces.

If required torque is $M_{2req} \geq 0,7 \times M_{N2}$, apply locking adhesives.

Tighten the screws according to the values given in the table on previous page.

To machine the matching frame, please refer to the drawings below.

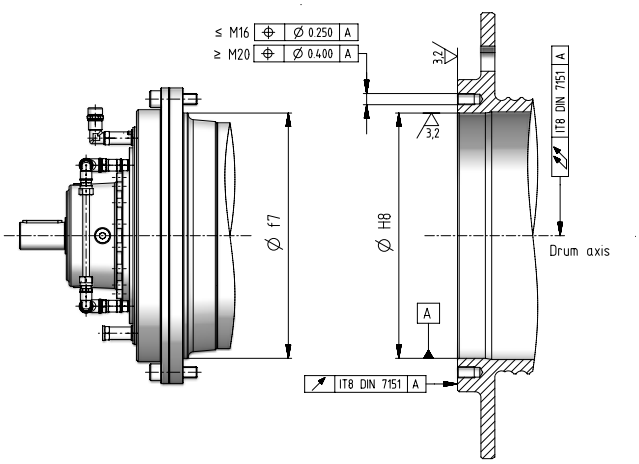

Important note.

The images in the catalog are for illustrative purposes only and may include elements of the winch designed by the customer, where necessary. These elements do not constitute design constraints, nor do they imply liability on the part of Rossi. The system designer is entirely responsible for the design of the winch, including compliance with applicable technical standards.

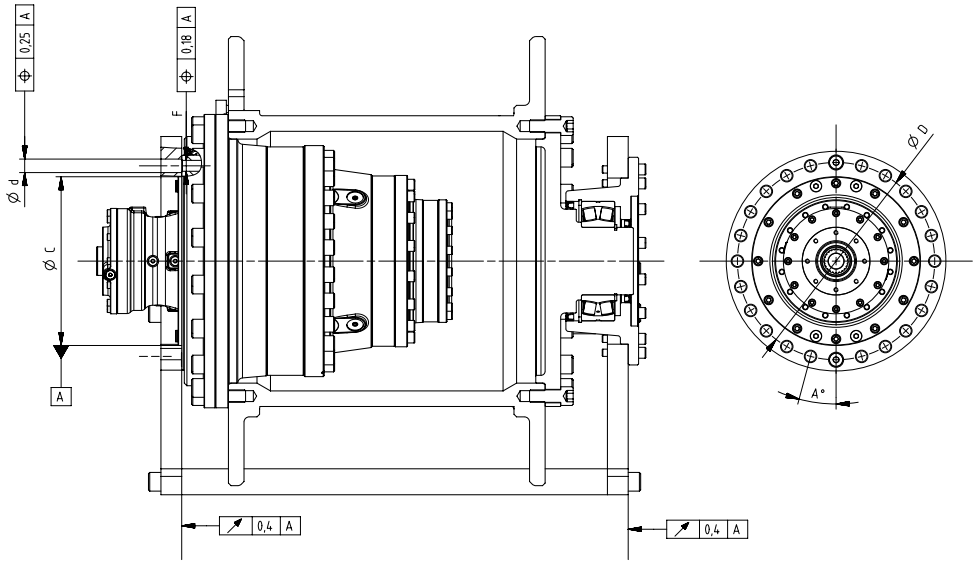

Size	A [°]	D Ø	F	d Ø	C Ø
030A	11° 15'	290	M16	17min	265
042A	15°	352	M24	25min	315
060A	15°	380	M24	25min	325
085A	13° 51'	430	M24	25min	370
125A	15°	470	M30	31min	420

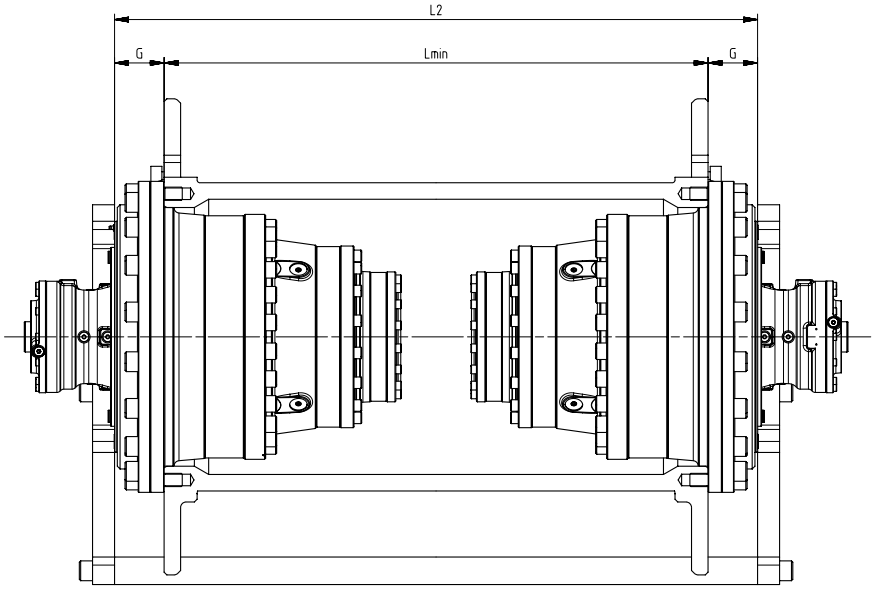

Size	L_{min} ± 0,5	G	L_2 ± 0,5
030A	Drum length defined by customer	79	L_{min} + (2 × L_1)
042A		89	
060A		89	
085A		88,5	
125A		88,5	

Universal flange adapter

The universal input flange allows the customers to make their flanges and couplings suitable for the main motorization types.
It's very important to observe the information shown in the drawing below to obtain a correct gear reducer oil sealing.
The universal input flange can be used for motors up to 1 000 N m maximum torque and weight as per following chart.

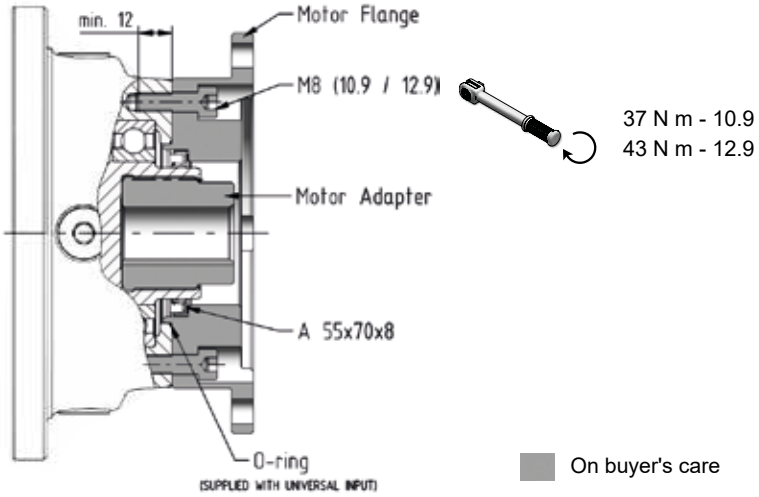

Gearboxes with "U" input (not "UN" and "UH") are supplied with an additional cover as shown below.
When a flange made by customer have to be used, please remove it.

Pay attention for gearboxes supplied with oil. Removing the cover oil may leak.

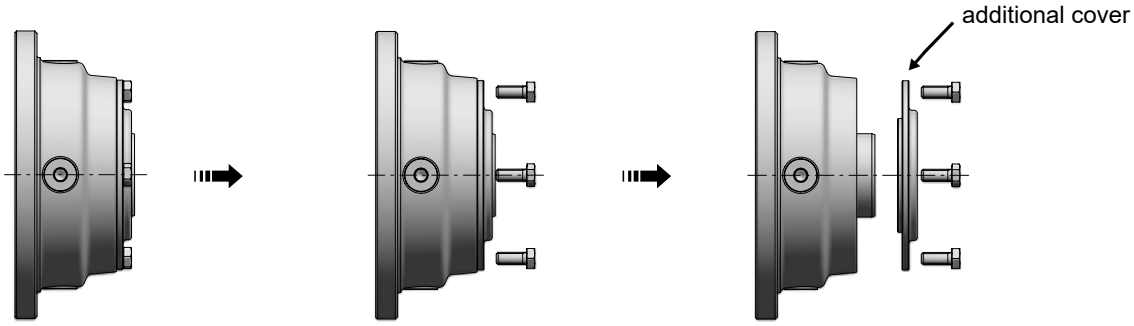

When a universal flange adapter is used, it must be checked if the total weight of the flange+motor and the distance of their center of gravity are compliant with the following diagram.
In case of high vibrations or dynamic stress, please contact Rossi S.p.A..

Severe or fatal injury and damage to property may occur.

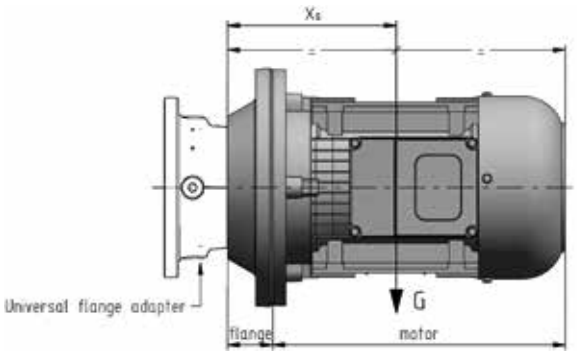

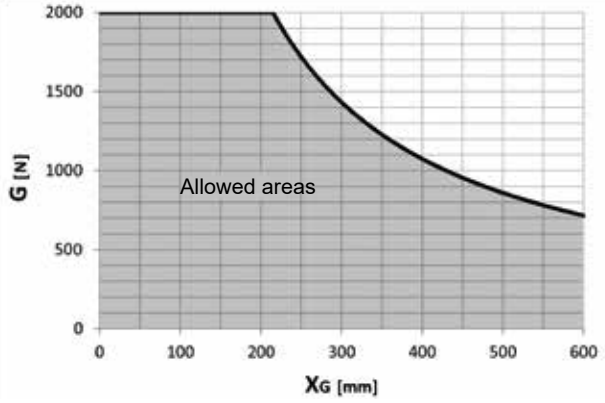

Motor mounting or replacement

Electric motors

Check the mating dimensions for standards IEC 72-1 be sure that the mating surfaces are machined under accuracy rating (IEC 60072-1, UNEL 13501-69; DIN 42955) – for NEMA standards please refer to NEMA C-FACE chart;

- clean surfaces to be fitted thoroughly;
- check and, if necessary, lower the parallel key so as to leave a clearance of 0,1 ÷ 0,2 mm between its top and the bottom of the keyway of the hole. If shaft keyway is without shoulder, lock the key with a pin.
- lubricate surfaces to be fitted against fretting corrosion (Klüberpaste 46 MR 401 is recommended).
- insert the motor down to shoulder on gear reducer flange; this operation can be facilitated by vertically positioning the gear reducer with motor flange mounted upwards;



Do not force the motor shaft into the gear reducer coupling. A serious damage may occur!

- check that motor centering is in the relevant gear reducer flange seat
- check that the length of the screws is enough to have 2 × pitch over the nut
- tighten the motor fastening screws to gear reducer flange in order to achieve the tightening torque as per following table:

Bolt **d** ∅	Tightening torque N m class **8.8**
M8	25
M10	56
M12	85
M14	135
M16	205

Maximum allowed bending moment

In case of assembly of motors supplied by the customer, verify that the static bending moment M_b generated by motor weight on the counter flange of gear reducer is lower than the value allowed M_{bmax}, stated in the table:

$$M_b < M_{bmax}$$

where:

$M_b = G \cdot (Y_G + h) / 1\,000$ [N m]

G [N] motor weight, nearly numerically equal to motor mass, expressed in kg, multiplied by 10
Y_G [mm] distance from motor center of gravity from flange surface
h [mm] supplied in the table, according to gear reducer size and IEC motor size

Too long and thin motors, though with bending moments lower than prescribed limits, may generate anomalous vibrations during the operation. In these cases it is necessary to foresee a proper additional motor support (see motor specific documentation).

Loads higher than permissible loads may be present in dynamical applications where the gearmotor is subjected to translations, rotations or oscillations: consult us for the study of every specific case.

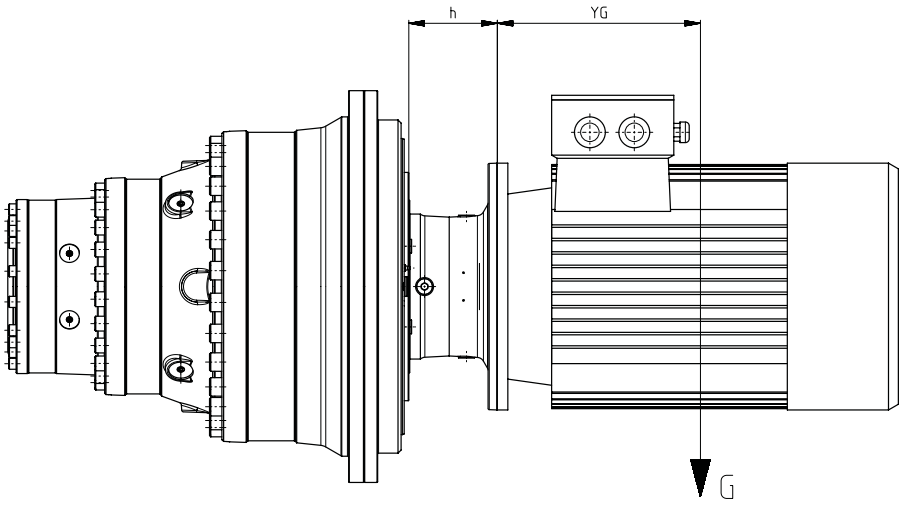

Bending moment M_{bmax} and dimension h

3WL	IEC	Code	h mm	M_{bmax} N m
030A ... 060A	100	**I28×250**	103	2800
	112	**I28×250**	103	
	132	**I38×300**	120	
	160	**I42×350**	153	
	180	**I48×350**	153	
	200	**I55×400**	153	
	225	**I60×450**	183	
085A ... 125A	132	**I38×300**	133,5	4500
	160	**I42×350**	159	
	180	**I48×350**	159	
	200	**I55×400**	159	
	225	**I60×450**	189	
	250	**I65×550**	189	
	280	**I75×550**	189	

Hydraulic motors

- check the mating dimensions
- clean surfaces to be fitted thoroughly
- ensure that any seal provided (O-ring) with hydraulic motor is correctly fitted in its seat
- lubricate surfaces to be fitted against fretting corrosion using proper grease or paste
- insert the motor down to shoulder on gear reducer flange; this operation can be facilitated by vertically positioning the gear reducer with motor flange mounted upwards



Do not force the motor shaft into the gear reducer coupling. A serious damage may occur!

- Check that motor centering is in the relevant gear reducer flange seat
- Tighten the motor fastening screws to gear reducer flange in order to achieve the appropriate tightening torque
- Use bolts 8.8 or higher

Oil quantities

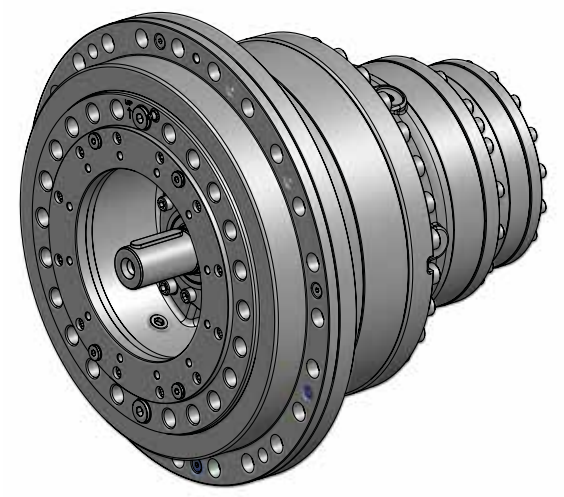

Size	H1 [1] [mm]	Oil volume [l] at H1 [2]	Oil volume [l] at H1 [2] with input C
030A	50	5	8,7
042A	60	6,7	11,7
060A	70	9	13,9
085A	75	13,8	21
125A	80	18,3	26,9

1) Minimum level values. It is recommended to increase this level by a further 5 mm.
To be increased by 10% if output speed is lower than 1 min^{-1}.
2) Stated oil quantities are approximate for provisioning. The exact quantity the gear reducer is to be filled with is definitely given by the level.

- For filling and oil level control, use the external kit supplied with the gearbox.
- The filling, draining and level control points are shown in the figures below.

Oil level kit dimensions

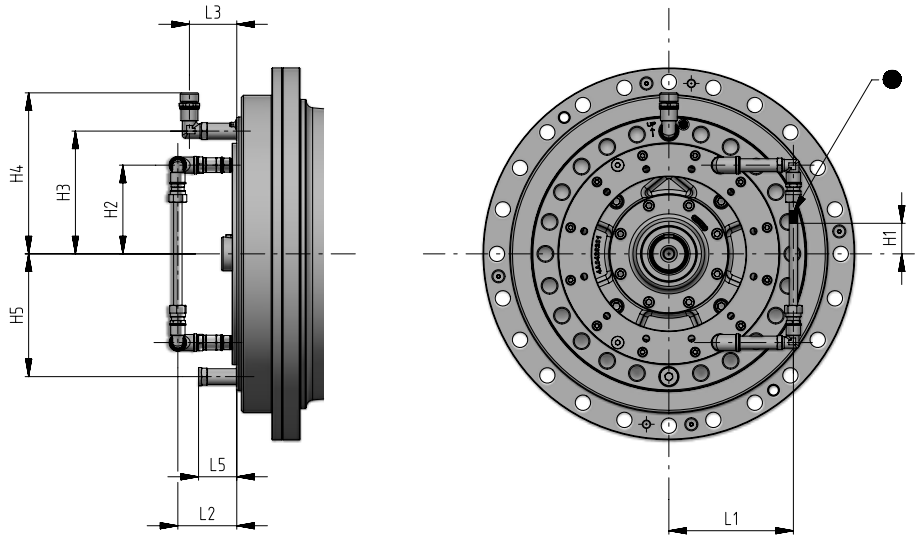

Size	H2	H3/H5	H4	L1	L2	L3	L5	Greaser
030A *	118	146,5	194	135	90	77	65	M8
042A	126,5	175	232	180	90	70	55	M10x1
060A	144,5	190	246	174	57	100	87	M10x1
085A	158	220	284	205	95	103	87	M10x1
125A	181	239	303	212	110	103	87	M10x1

* For J input design, only.

NOTE: for size 030 (except with J input), the oil level kit is mounted as indicated in the following figure

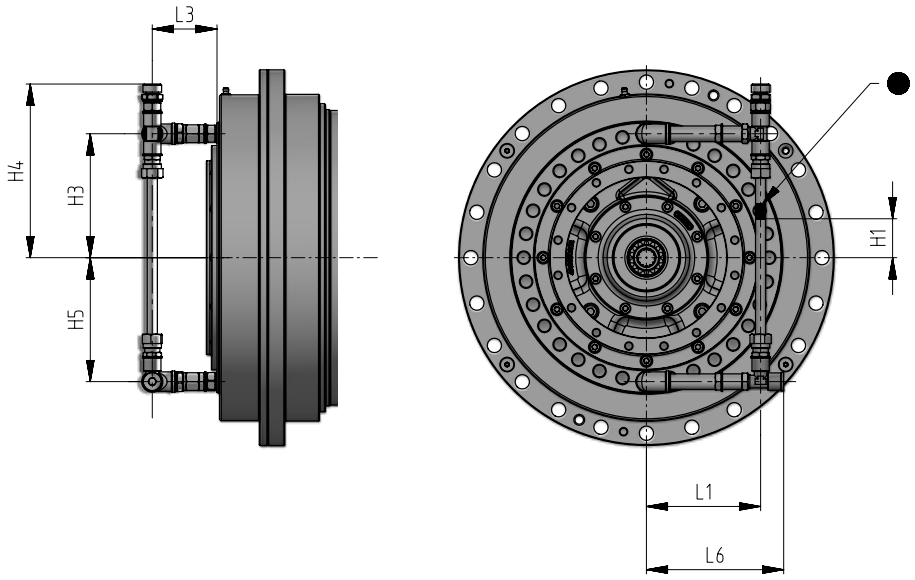

Size	H3/H5	H4	L1	L3	L6
030A *	146,5	207	140	85	170

* Standard.

Oil level kit dimensions with forced lubrication system or auxiliary cooling system

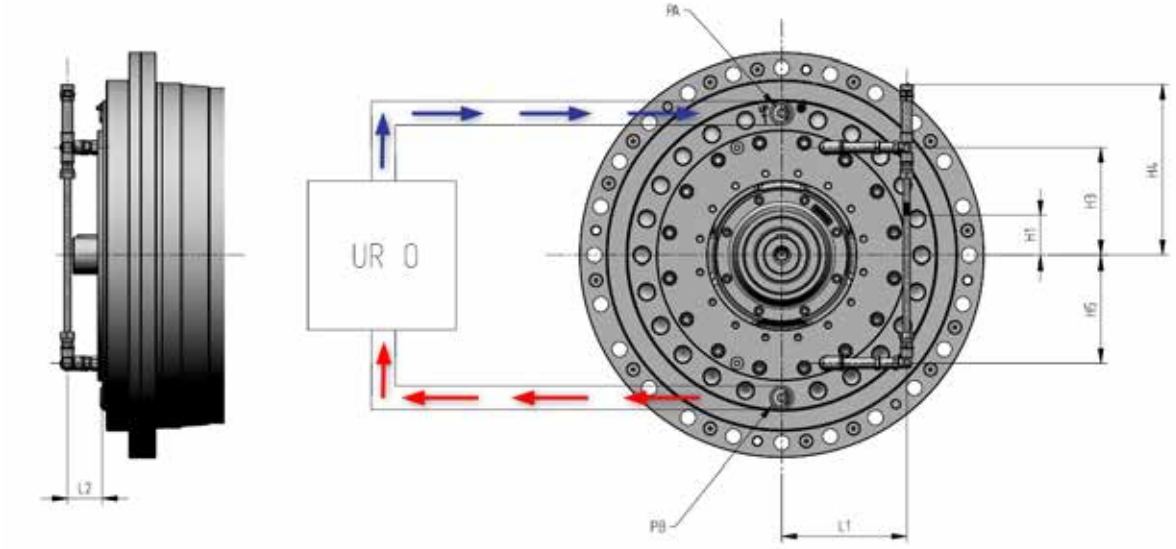

Size	H3/H5	H4	L1	L2	PA / PB
030A *	118	178	135	90	G 3/8"
042A	126,5	205	180	90	G 1/2"
060A	144,5	222	174	57	G 1/2"
085A	158	267	205	95	G 3/4"
125A	181	290	212	110	G 3/4"

* For J input design, only.

PB10 (030/042/060)

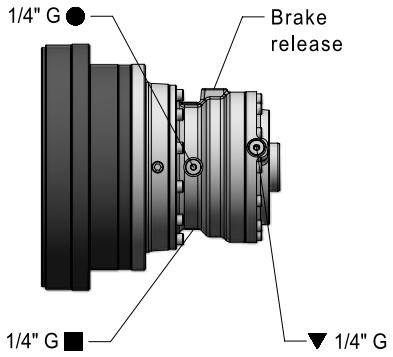

PB30 (030/042/060)

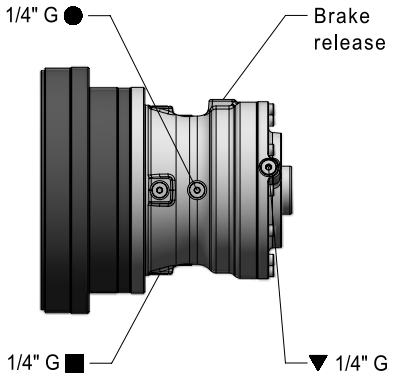

PB90 (085/125)

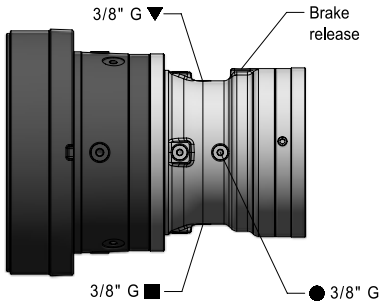

Brake	Oil quantity [l]
PB10	0,09
PB30	0,36
PB90	0,48

Oil quantity [l]

The exact quantity the brake is to be filled with is given by the level.

Lubrication

Gear pairs are oil-bath lubricated, bearings are either oil bathed or splashed or lubricated «for life» with grease.

Sizes 030A … 125A: gear reducers are supplied **without oil**; before putting into service, fill to the specified level with synthetic or mineral oil (see table below).

Important:

Inappropriate lubricants can cause damage to the gear reducer. Polyalphaolefin (PAO) base synthetic lubricants must be preferred over Polyglycol (PAG) base synthetic lubricants.

Never mix different type or brand of synthetic oil; if the oil-change involves switching to a different type from the one used so far, then give the gear reducer a through clean-out.

In case of first filling of Polyglycol (PAG) base synthetic lubricant it is mandatory to clean the gear reducer thoroughly before the final filling through a preliminary internal washing to eliminate the residues of any lubricants.

Rossi S.p.A. declines any responsibility deriving from the use of other lubricants or from the use outside the expected ambient temperature range. The indications on lubricants do not bind Rossi S.p.A. on the quality of the lubricant supplied by each respective manufacturer.

Use only lubricants with **EP** (extreme pressure) **additives**.
In case of mineral lubricant choice, follow the instructions about the service factor (EP catalog).

Manufacturer	**PAO synthetic oil** ISO VG 320	mineral oil ISO VG 150 ... 460
ENI	Blasia SX	Blasia
ARAL	Degol PAS	Degol BG
BP	Enersyn EPX	Energol GR-XP
CASTROL	Alphasyn EP	Alpha SP
FUCHS	Renolin Unisys	Renolin CLP

Manufacturer	**PAO synthetic oil** ISO VG 320	mineral oil ISO VG 150 ... 460
KLÜBER	Klübersynth GEM4	Klübersynth GEM1
MOBIL	Mobil SHC Gear	Mobilgear 600 XP
SHELL	Omala S4 GX	Omala S2 G
TEXACO	Pinnacle	Meropa
TOTAL	Carter SH	Carter EP

For lubricant viscosity selection, refer to the table in the next page.

Bearings with independent lubrication

Usually the bearings are automatically and continuously lubricated (oil-bathed or splashed) with the same lubricant of gear reducer.

Lubrication of PB parking brakes

PB series brakes **require lubrication** and are supplied **without oil**, as specified by the relevant adhesive label.
Before putting the brakes into service fill them with mineral oil ISO VG 32, unless otherwise prescribed by specific documentation.
Hydraulic oils are generally suitable.
The separate lubrication prevents premature lubricant contamination in the gear reducer, increasing gears and bearings life.



Lubricant

Lubricant type and viscosity selection according to output speed n_2 [min^{-1}] and ambient temperature T_{amb} [°C] range.

The following tables have been created starting from Shell lubricant characteristics, but are also valid for similar products (see table on the previous page).

For further verification, especially under extreme operating conditions, always refer to the technical data sheet of the specific lubricant.

Splash lubrication or with independent cooling units [1)]

	Oil viscosity [cSt @ 40°C]	Ambient temperature T_{amb} [°C]														
		-20	-15	-10	-5	0	+5	+10	+15	+20	+25	+30	+35	+40	+45	+50
Mineral oil	ISO VG 150	n_2 >140														
	ISO VG 220		2,0 ≤ n_2 ≤140								n_2 >140					
	ISO VG 320			n_2 < 2,0							2,0 ≤ n_2 ≤140					
	ISO VG 460				n_2 < 2,0											
PAO synthetic oil (Polyalphaolefine)	ISO VG 150	n_2 >140														
	ISO VG 220	2,0 ≤ n_2 ≤140				n_2 >140										
	ISO VG 320	n_2 < 2,0				2,0 ≤ n_2 ≤140										
	ISO VG 460		n_2 < 2,0													

1) Provide starting of the indipendent cooling units only when the oil temperature T_{oil} is > 25°C. During the starting, it may take a short period of time for the oil to circulate completely between the unit and the gearbox, depending on the viscosity level and the morphology of pipes and oil connections. During this transitional period, operation of the gear unit is permitted.

Forced lubrication with/without heat exchanger [2)]

	Oil viscosity [cSt @ 40°C]	Ambient temperature T_{amb} [°C]														
		-20	-15	-10	-5	0	+5	+10	+15	+20	+25	+30	+35	+40	+45	+50
Mineral oil	ISO VG 150						n_2 >140									
	ISO VG 220							2,0 ≤ n_2 ≤140			n_2 >140					
	ISO VG 320								n_2 < 2,0		2,0 ≤ n_2 ≤140					
	ISO VG 460									2,0 ≤ n_2 ≤140						
PAO synthetic oil (Polyalphaolefin)	ISO VG 150							n_2 >140								
	ISO VG 220								n_2 >140							
	ISO VG 320															
	ISO VG 460															

2) In the case of forced lubrication, the gear unit should only be operated when the oil temperature T_{oil} is higher than the temperature indicated in the table. During start-up of the lubrication unit, a short period of preheating may be necessary, to be carried out with the gear unit at standstill, before complete circulation of the oil and proper lubrication of the internal components is achieved.

Admitted application field, optimal range.

Admitted application field where higher absorption is expected due to higher viscosity; prefer gradual starts and partial load operation.

Non-optimal application range; in this case it is recommended to use oils with viscosity grade at least 30 cSt referred to max oil temperature (T_{oil}) during the operation.

Non-optimal application range; in this case it is necessary to foresee oil with Pour Point at least 10°C lower than the minimum temperature indicated by the field. Foresee a phase of rotation at no load (pre-heating) at least up to the attainment of a temperature T_{amb} equal or superior to the minimum indicated in the field of application admitted.

Application field not allowed. If necessary contact Rossi S.p.A.

n_2 >140 Indicative output speed for selection of lubricant viscosity

Plugs

For EP series plugs are magnetic. Size of plugs and breather plugs and values of tightening torque are shown below.

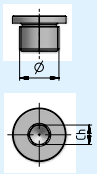

Filler plugs		
Ø	**Ch**	**Tightening torque** [N m]
G 3/8 "	8	**20**
G 1/2 "	10	**30**
G 3/4"	12	**45**

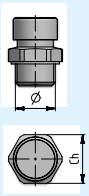

Breather plugs		
Ø	**Ch**	**Tightening torque**[1)] [N m]
G 3/8 "	20	**16**
G 1/2 "	24	**23**
G 3/4 "	32	**37**

1) Values valid with washer in alluminium.

For the first commissioning, before starting with a normal running cycle, it is advisable to run the gear reducer without load in order to verify if it correctly runs.
In this circumstance, cause of the elimination of potential residual air, an oil filling up to level could be necessary.
During this first run, it is important to check:

- noise level
- vibrations
- sealings

If you notice any malfunctions, please consult Rossi.

Brake release

To release the brake it is recommended the use of mineral-based hydraulic oil; synthetic oils may damage and cause malfunctions in the brake.
Connect the brake to the hydraulic circuit of machine through the brake release hole. Before first use it is necessary to bleed off.

Follow the instructions below:

- Slightly loosen the release fitting
- Release the brake at low pressure and wait for the complete bleeding off
- Tighten the release fitting

See ch. 3 for further information.

Brake release hole

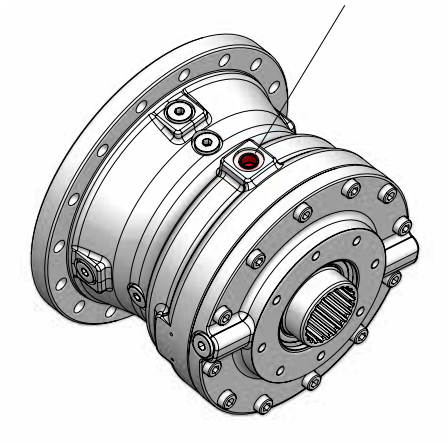

Oil filling

Where gear reducer is provided without lubricant, it is necessary to fill it with appropriate oil before commissioning.
In the same way, when parking brake is present, it is necessary to fill it with specific lubricant.
If a forced lubrication system or auxiliary cooling system are going to be used, this must be specified when ordering.

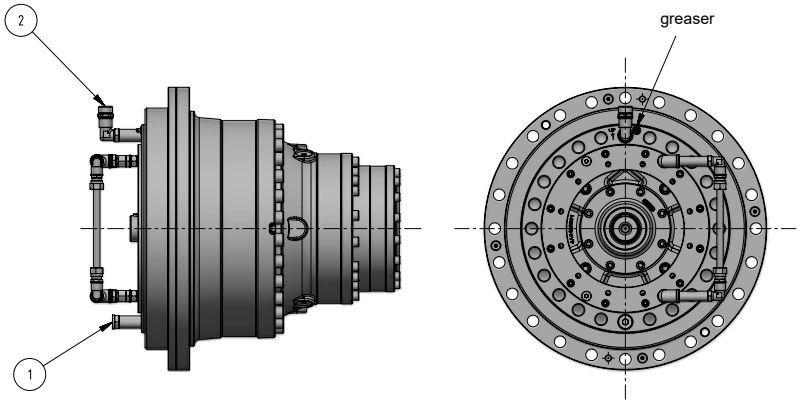

Size	**Thread dimensions** Plug 1 / Plug 2
030A	G 3/8"
042A	G 1/2"
060A	G 1/2"
085A	G 3/4"
125A	G 3/4"

The oil filling must be done at room temperature:
1) Open the plugs 1 and 2 (plug 1 = filler plug; plug 2 = breather plug);
2) Fill with oil through hole 1, by using a pump, until the correct level is reached. Air is drained by the hole 2;
3) Close both plugs.

NOTE: for size 030 (except with J input), the oil level kit is mounted as indicated in the following figure. The oil filling is made in the same way, but using the holes in the kit.

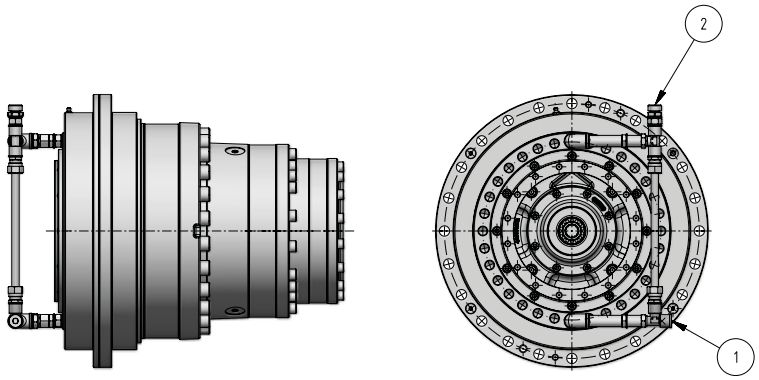

IMPORTANT: To allow the gearbox to be mounted on the frame, the shoulder frame must be machined to create two slots at 180° in correspondence with the holes for the drain plug and the breather plug (or intake and outtake holes in case of auxiliary cooling system). In one of the two, space must also be left for the greaser. The figure shows the dimensions in detail.

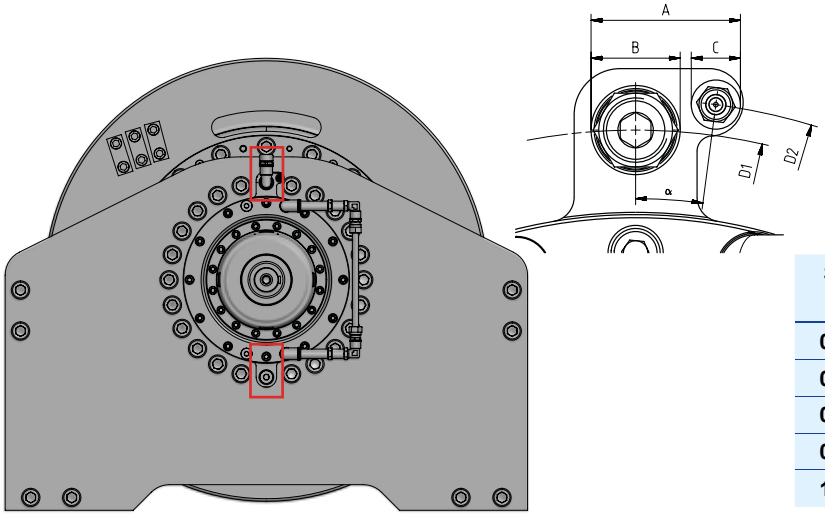

Size	A	B	C	α	D1 ∅	D2 ∅
030A	17	17	-	-	273	-
042A	43,5	29	16	6° 30'	350	371
060A	49	29	16	7° 30'	390	400
085A	58	40	16	7° 30'	440	460
125A	61	40	16	7° 30'	478	500

Auxiliary cooling system

The power transmitted could be higher than the thermal power dissipated by the gear reducer. In this case, Rossi proposes an auxiliary cooling system able to:

- Dissipate the thermal power in excess;
- Maintain a good level of cleaning of the lubricating oil by using constant filtering.

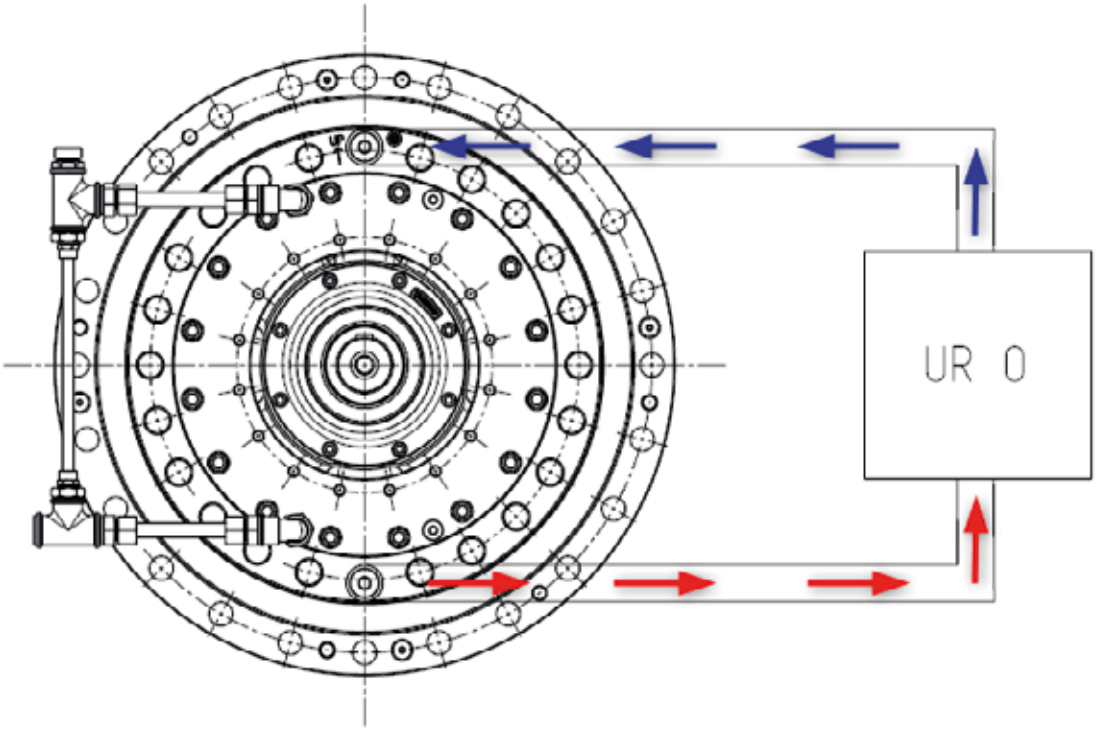

When choosing the auxiliary cooling system, it is good to make sure that the flow rate (liters / minute) does not exceed 50% of the volume of lubricant present inside the gear reducer.

If a forced lubrication system or auxiliary cooling system are going to be used, the oil level kit is mounted as indicated in the following figure (plug 2 thread is G 3/8" for all sizes):

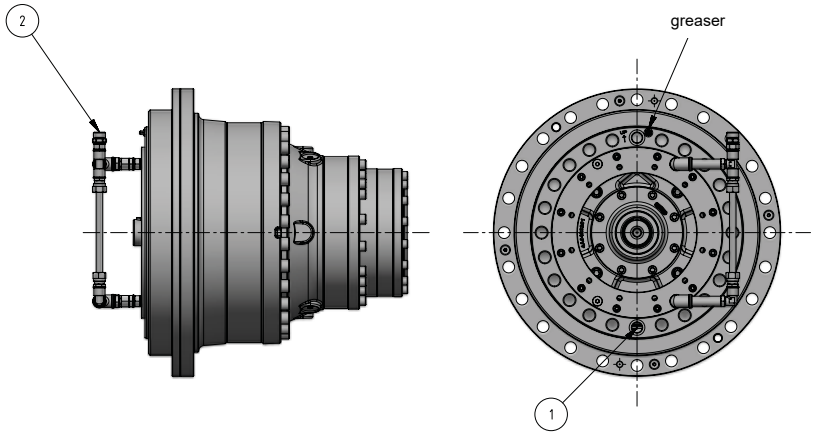

NOTE: for size 030 (except with J input), the oil level kit cannot be mounted, and oil filling must be done in accordance with the oil volume indicated in the catalog.

Design advice for independent cooling units

For the design of the cooling system, see the following instructions and sample diagrams.
It is recommended for suction to be in the lowest point and that suction and delivery points are adequately distant from each other. For the design of independent units, see EP catalog.

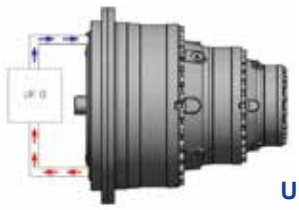

UR O ...

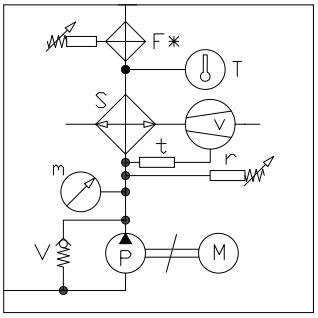

Legend:

Pt 100	oil temperature probe (supplied separately)
F	filter with electric clogging signaller (with UR O/W... it is supplied separately)
m	manometer 0 ÷ 16 bar
M	motor pump
P	pump
CT 03*, CT10*	signalling device (supplied separately)
S	oil/air or oil/water heat exchanger
v	motor fan (UR O/A ...)
t	fan thermostat 0 ÷ 90 °C (UR O/A...)
T	thermometer 0 ÷ 120 °C
V	safety valve 6 bar (screw pump)
r	low pressure switch

* On request.

Oil flow capacity of holes

Plugs size	d	$q_{s\,(max)}$ [l/min]	$q_{d\,(max)}$ [l/min]
G 1/4"	7	3	5
G 3/8"	10	6	10
G 1/2"	12	9	15
G 3/4"	16	16	27
G 1"	22	30	51
G 1 1/4"	30	56	95

Stated values are valid with a kinematic oil viscosity of about 60 Cst.

For exact oil levels, plug positions and size, expansions tanks, see page 93.

It is very important to design the hydraulic circuit according to the following indications:

$$q_s \leq Q_R$$

q_s max delivery in suction for 1 hole.
q_d max delivery sending for 1 hole.
Q_R is the gear reducer oil quantity at correct level, see ch. 6, cat. EP series.
d internal diameter of fitting and pipes.

Where the use of only one hole is not enough to dispose all the oil flow, 2 or more holes can be connected at the main pipe-lines (suction and delivery).
Obviously, being a closed circuit, the total oil flow in suction and delivery must be equivalent.

Maintenance

At machine rest, verify at regular intervals (more or less frequently according to environment and use):

- all external surfaces are clean and air passages to the gear reducer are free, in order that cooling remains fully effective. An accumulation of dust impedes efficient heat exchange from the gear reducer housing and must be removed;
- oil level, oil leakage and deterioration degree (check with cold gear reducer at rest);
- correct fastening screws tightening.

During operation, check periodically

- noise level;
- vibrations;
- sealings



Attention! After a running period, gear reducer is subject to a light internal overpressure which may cause burning liquid discharge. Therefore, before loosening whichever plug (filler plug included) wait until gear reducer has become cold and open it carefully; if not possible, take the necessary protection measures against burning due to warm oil contact. In all cases, always proceed with great care.

Maximum oil temperatures indicated on lubrication table do not represent a hindrance to the gear reducer regular running.

Consider the lubrication interval stated in the table for all re-lubrication operations.

Use only lubricants of the same type stated on lubrication nameplate.

Oil temperature [°C]	Oil-change interval [h]	
	synthetic oil	mineral oil
≤ 65	**12 500**	5 600
65 ÷ 80	**10 000**	2 800
80 ÷ 95	**6 300**	1 400

Oil-change intervals assume pollution-free environment. When heavy overloads are present, halve the values.

Independently from running times, change the oil:

every 2 ÷ 4 years, for synthetic oil;

every 1 ÷ 2 years, for mineral oil;

During oil change operation, after unscrewing also the filler plug in order to facilitate oil draining (for plug position see ch. 4):

- wash the inside part of gear reducer housing using the same oil type suitable for the running (stated on lubrication nameplate); the oil used for this wash can be applied for further washings after proper filtering by 25 µm of filtration standard;
- clean, using a compressed air stream, all magnetic plugs, taking care to assemble them again in their original position;
- fill in the gear reducer with new oil up to level, using only oil of the same type and viscosity as per lubrication nameplate.

Seal rings

Replace the seal rings in case of dismounting or of periodical check; in this case, the new ring must be positioned so that it does not work on the same sliding race of previous ring.

Duration depends on several factors such as dragging speed, temperature, ambient conditions, etc.; as a rough guide it can vary from 1 600 ÷ 12 500 h.

Refill output seals with grease every 3 000 operating hours or at least every 6 months.

Troubles: causes and corrective actions

Trouble	Possible causes	Corrective actions
Excessive temperature (in continuous duty or of bearings)	Inadequate lubrication: — excessive of insufficient oil quantity — exhaust lubricant — too tightened taper roller bearings	Check: — oil level (gear reducer standstill) — lubricant type Consult Rossi
	— excessive ambient temperature	Increase the cooling or correct the ambient temperature
	Bearing failure, defect or bad lubrication	Consult Rossi
	Inefficient or out of service oil cooling system: obstructed filter, insufficient oil (exchanger) or water (coil) flow rate, pump out of service, etc.	Check the pump, the pipes, the oil filter and safety devices efficiency (manostats, thermostats, etc.)
Anomalous noise	One or more teeth with — dents or spallings — excessive flanks roughness	Consult Rossi
	Bearings failure, defect or bad lubrication	
	Taper roller bearings with excessive clearance	
	Vibrations	Check the fastening
Lubricant leaking from seal rings	Seal ring with worm, bakelized, damaged or false mounted seal lip	Replace the seal ring
	Damaged rotating seating (scoring, rust, dent, etc.)	Restore the seating
	Mounting position differs from the one stated on the name plate	Correctly position the gear reducer

NOTE

When consulting Rossi state:
- all data on gear reducer or gearmotor name plate;
- failure nature and duration;
- when and under what conditions the failure happened;
- during the warranty period, in order not to loose its validity, do not dissamble nor open the gear reducer without the approval of Rossi.

Main formulae concerning mechanical drives, according to the Technical System and International Unit System (SI).

Frame size	With Technical System units	With SI units
starting or stopping **time** as a function of an acceleration or deceleration, of a starting or braking torque	$t = \frac{v}{a}$ [s] $t = \frac{Gd^2 \cdot n}{375 \cdot M}$ [s]	$t = \frac{J \cdot \omega}{M}$ [s]
velocity in rotary motion	$v = \frac{\pi \cdot d \cdot n}{60} = \frac{d \cdot n}{19,1}$ [m/s]	$v = \omega \cdot r$ [m/s]
angular velocity	$n = \frac{60 \cdot v}{\pi \cdot d} = \frac{19,1 \cdot v}{d}$ [min^{-1}]	$\omega = \frac{v}{r}$ [rad/s]
acceleration or deceleration as a function of starting or stopping time	$a = \frac{v}{t}$ [m/s^2]	
angular **acceleration** or **deceleration** as a function of a starting or stopping time, of a starting or braking torque	$\alpha = \frac{n}{9,55 \cdot t}$ [rad/s^2] $\alpha = \frac{39,2 \cdot M}{Gd^2}$ [rad/s^2]	$\alpha = \frac{\omega}{t}$ [rad/s^2] $\alpha = \frac{M}{J}$ [rad/s^2]
starting or stopping distance as a function of an **acceleration** or deceleration, of a final or initial velocity	$s = \frac{a \cdot t^2}{2}$ [m] $s = \frac{v \cdot t}{2}$ [m] $w = \frac{\alpha \cdot t^2}{2}$ [rad]	
starting or stopping **angle** as a function of an angular acceleration or deceleration, of a final or initial angular velocity	$\varphi = \frac{n \cdot t}{19,1}$ [rad]	$\varphi = \frac{\omega \cdot t}{2}$ [rad]
mass	$m = \frac{G}{g}$ [$\frac{kgf\ s^2}{m}$]	m is the unit of mass [kg]
weight (weight force)	G is the unit of weight [kgf]	$G = m \cdot g$ [N]
force in vertical (lifting), horizontal, inclined motion of translation (μ = coefficient of friction; φ = angle of inclination)	$F = G$ [kgf] $F = \mu \cdot G$ [kgf] $F = G\ (\mu \cdot cos\ \varphi + sen\ \varphi)$ [kgf]	$F = m \cdot g$ [N] $F = \mu \cdot m \cdot g$ [N] $F = m \cdot g\ (\mu \cdot cos\ \varphi + sen\ \varphi)$ [N]
dynamic moment Gd², moment of inertia J due to a motion of translation (numeralically $J = \frac{Gd^2}{4}$)	$Gd^2 = \frac{365 \cdot G \cdot v^2}{n^2}$ [kgf m^2]	$J = \frac{m \cdot v^2}{\omega^2}$ [kg m^2]
torque as a function of a force, of a dynamic moment or of a moment of inertia, of a power	$M = \frac{F \cdot d}{2}$ [kgf m] $M = \frac{Gd^2 \cdot n}{375 \cdot t}$ [kgf m] $M = \frac{716 \cdot P}{n}$ [kgf m]	$M = F \cdot r$ [N m] $M = \frac{J \cdot \omega}{t}$ [N m] $M = \frac{P}{\omega}$ [N m]
work, energy in motion of translation, in rotary motion	$W = \frac{G \cdot v^2}{19,6}$ [kgf m] $W = \frac{Gd^2 \cdot n^2}{7160}$ [kgf m]	$W = \frac{m \cdot v^2}{2}$ [J] $W = \frac{J \cdot \omega^2}{2}$ [J]
power in motion of translation, in rotary motion	$P = \frac{F \cdot v}{75}$ [CV] $P = \frac{M \cdot n}{716}$ [CV]	$P = F \cdot v$ [W] $P = M \cdot \omega$ [W]
power available at the shaft of a single-phase motor ($cos\ \varphi$ = power factor)	$P = \frac{U \cdot I \cdot \eta \cdot cos\ \varphi}{736}$ [CV]	$P = U \cdot I \cdot \eta \cdot cos\ \varphi$ [W]
power available at the shaft of a three-phase motor	$P = \frac{U \cdot I \cdot \eta \cdot cos\ \varphi}{425}$ [CV]	$P = 1,73 \cdot U \cdot I \cdot \eta \cdot cos\ \varphi$ [W]

Note. Acceleration or deceleration are understood constant; motion of translation and rotary motion are understood rectilinear and circular respectively.

Main formulae concerning mechanical drives, according to the Technical System and International Unit System (SI).

Frame Size	With Technical System units	With SI units
torque transmissible by a hydraulic motor		$M = \frac{V_g\,[cm^3/rev] \cdot \Delta p\,[bar] \cdot \eta_{mh}}{62{,}832}$ [N m]
power available at the shaft of a hydraulic motor		$P = \frac{V_g\,[cm^3/rev] \cdot \Delta p\,[bar] \cdot \eta_t \cdot n\,[min^{-1}]}{600000}$ [kW]
flow (hydraulic motor)		$q_v = \frac{V_g\,[cm^3/rev] \cdot n\,[min^{-1}]}{1000 \cdot \eta_v}$ [l/min]
speed (hydraulic motor)		$n = \frac{1000 \cdot \eta_v \cdot q_v\,[l/min]}{V_g\,[cm^3/rev]}$ [min^{-1}]

Symbols and units of measure

Symbol	Description	SI Units of Measure
C	dynamic bearing load	-
C_0	static bearing load	-
D	diameter	mm
D_d	drum diameter	mm
D_r	rope diameter	mm
D_w	pull load application diameter at last layer	mm
f	frequency	Hz
fs	service factor	-
ft	thermal factor	-
F	force	N
F_p	rope pull load	N
F_{r1}	radial loads on high speed shaft	N
F_{r2}	radial loads on low speed shaft	N
F_{a1}	axial loads on high speed shaft	N
F_{a2}	axial loads on low speed shaft	N
g	acceleration of gravity	m/s^2
G	weight (weight force)	N
h_r	duration required	h
i	transmission ratio	-
J	moment of inertia	$kg\ m^2$
K_2	gear reducer torsional stiffness referred to the low speed shaft	N m/°
L_{10h}	required bearing lifetime	h
L_h	required lifetime	h
L_i	load spectrum	
m	mass	kg
M	torque	N m
$M_{2\ HOLD}$	static braking torque required at the drum	N m
$M_{2\ STATIC}$	allowed static output torque	N m
M_2	nominal output torque of gear reducer, derived from input power applied	N m
M_{2max}	maximum torque admissible on gear reducer low speed shaft	N m
M_{2req}	required output torque	N m
M_{2U}	maximum value of output torque, for a specific output design	N m
M_b	Static bending moment	N m
M_{N2}	nominal output torque of gear reducer, for a specific angular velocity	N m
M_{N2FEM}	transmissible torque of the gear reducer corresponding to the FEM class	N m
$M_{N2FEM\ MAX}$	maximum transmissible torque of the gear reducer corresponding to the FEM class	N m
n	angular speed	min^{-1}
n_1	input speed	min^{-1}
n_2	output speed	min^{-1}
$n_{2\,1}$ ... $n_{2\,n}$	low speed shaft in the interval 1 ... n in the operation cycle	min^{-1}
n_{2req}	required output speed at the drum	min^{-1}
P	power	kW
P_a	Nominal power of the independent cooling unit	kW
Pt	thermal power	kW
P_1	input power applied on gear reducer	kW
P_{N2}	nominal power produced by gear reducer, referred to low speed shaft	kW
P_{1th}	equival. thermal power in the operation cycle, applied on gear reducer high speed shaft	kW

Symbols and units of measure

Symbols	Description	SI Units of Measure
Q_R	gear reducer oil quantity at correct level	l
s_t	overlapping rope layers	-
T	Celsius temperature	°C
T_{amb}	ambient temperature	°C
T_{oil}	oil temperature	°C
T_i	class of utilization	
t	time	s (min, h, d)
$t_1 \dots t_n$	duration of load cycles 1 ... n	h
U	voltage	V
v_{req}	required rope speed	m/min
W	work, energy	J
z	frequency of overloads per hour	starts/h
α	angular acceleration	rad/s^2
V_g	displacement per revolution	cm^3
q_v	input flow	l/min^{-1}
η	efficiency	-
η_v	volumetric efficiency	-
η_{mh}	mechanical hydraulic efficiency	-
η_t	total efficiency ($\eta_v \cdot \eta_{mh}$)	-
φ	plane angle	°
$\Delta\varphi$	clearance on gear reducer low speed shaft	['] arcmin
Δp	different pressure	Pa
ω	angular velocity	rad/s

Index and other symbols	Description
N	nominal
1	relating to high speed shaft (input)
2	relating to low speed shaft (output)
max	maximum
min	minimum
eq	equivalent
th	thermal
c	cycle
÷	from ... to
≈	approximately equal to
≥	greater than or equal to
≤	less than or equal to

Icons

Danger

The paragraphs marked with symbols shown below contain dispositions to be strictly respected in order to assure personal **safety** and to avoid any **heavy damages** to the machine or to the system (e.g.: works on live parts, on lifting machines, etc.); the responsible for the installation or maintenance must scrupulously **follow all instructions contained in present handbook.**

Icons	Description
	Dangerous situation, the operator must take all safety measures to avoid serious damage or injury
	Attention
	Do not use for lifting. Lifting and handling incorrect
	Suspended loads. Do not stand under suspended loads

General

Icons	Description
	Refer to page ...
	Refer to chapter ...
	Mass
	Alternative output design
	Shaft subjected to torque only
	Shaft subjected to both torque and radial load
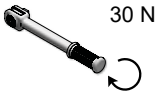	Tightening torque
-	Not available
	Recycling

blank page

Product

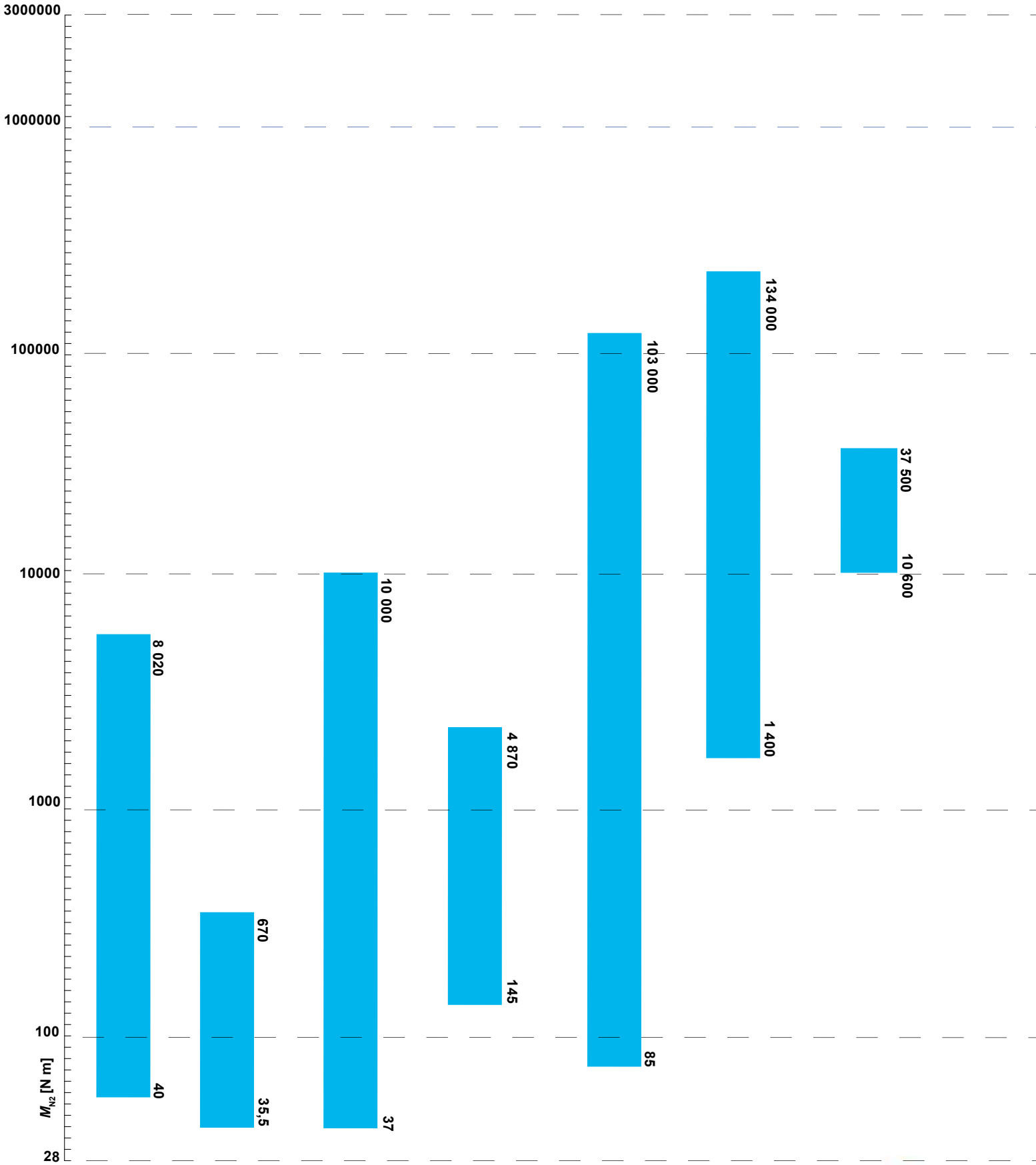



A Series
Worm



AS series
Worm Standardfit



E Series
Helical inline



iFIT Series
Helical inline,
bevel helical and helical



G Series
Helical and bevel
helical



GX Series
Extruder design

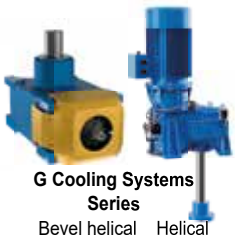

G Cooling Systems Series
Bevel helical Helical

range

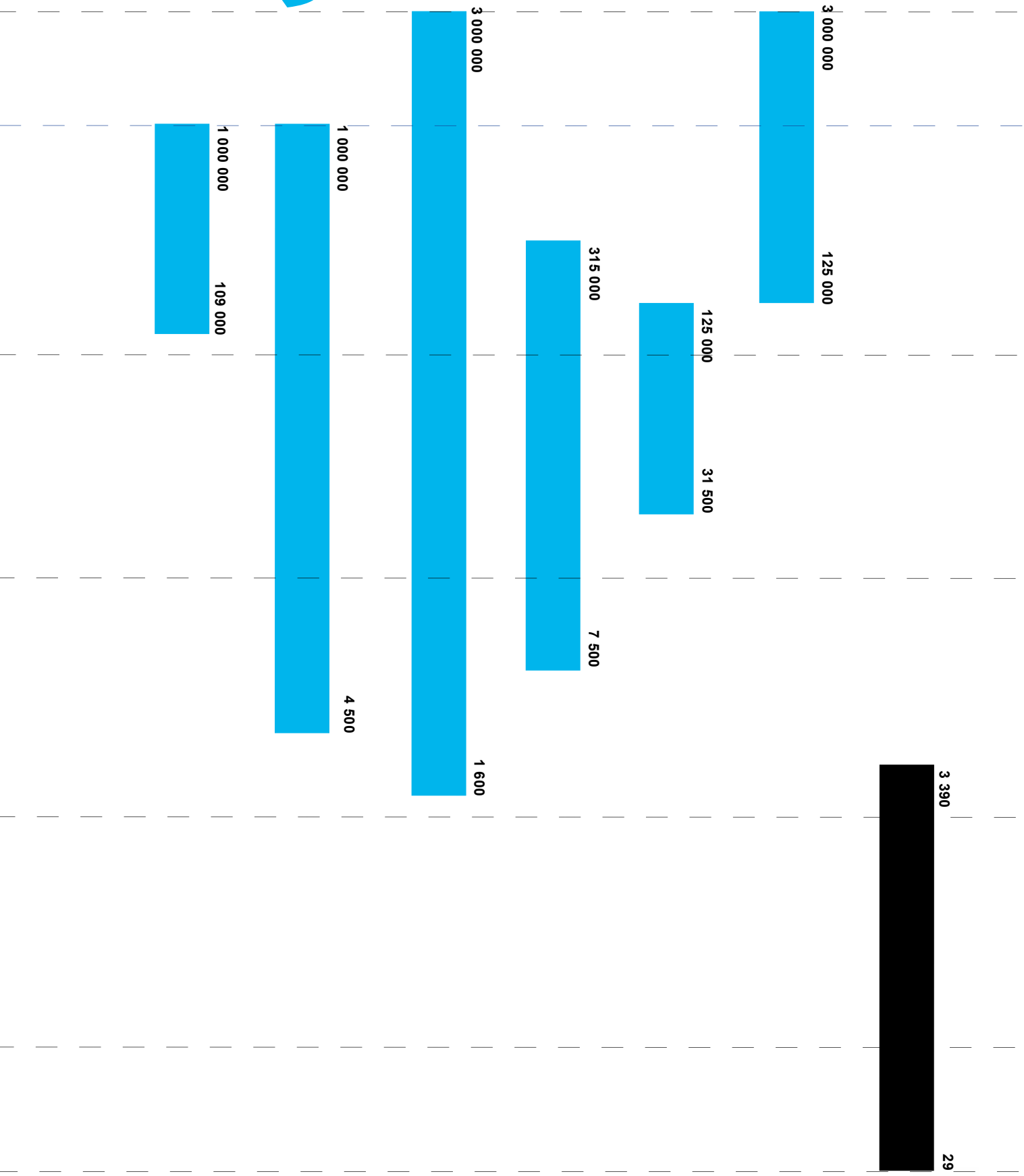



H series
Helical and bevel helical



G & H series
Drive units on base frame/ swing base



EP Series
Planetary



EPS Series
Planetary slewing



EP Winch Series
Winch drives



Combined units
Planetary + Bevel helical



SR series
Worm, helical inline, helical and bevel helical

Global presence local service

Local support
Sales, customer service, technical support, spare parts

17 branches*

Worldwide distribution network*



*All contacts available on **www.rossi.com**

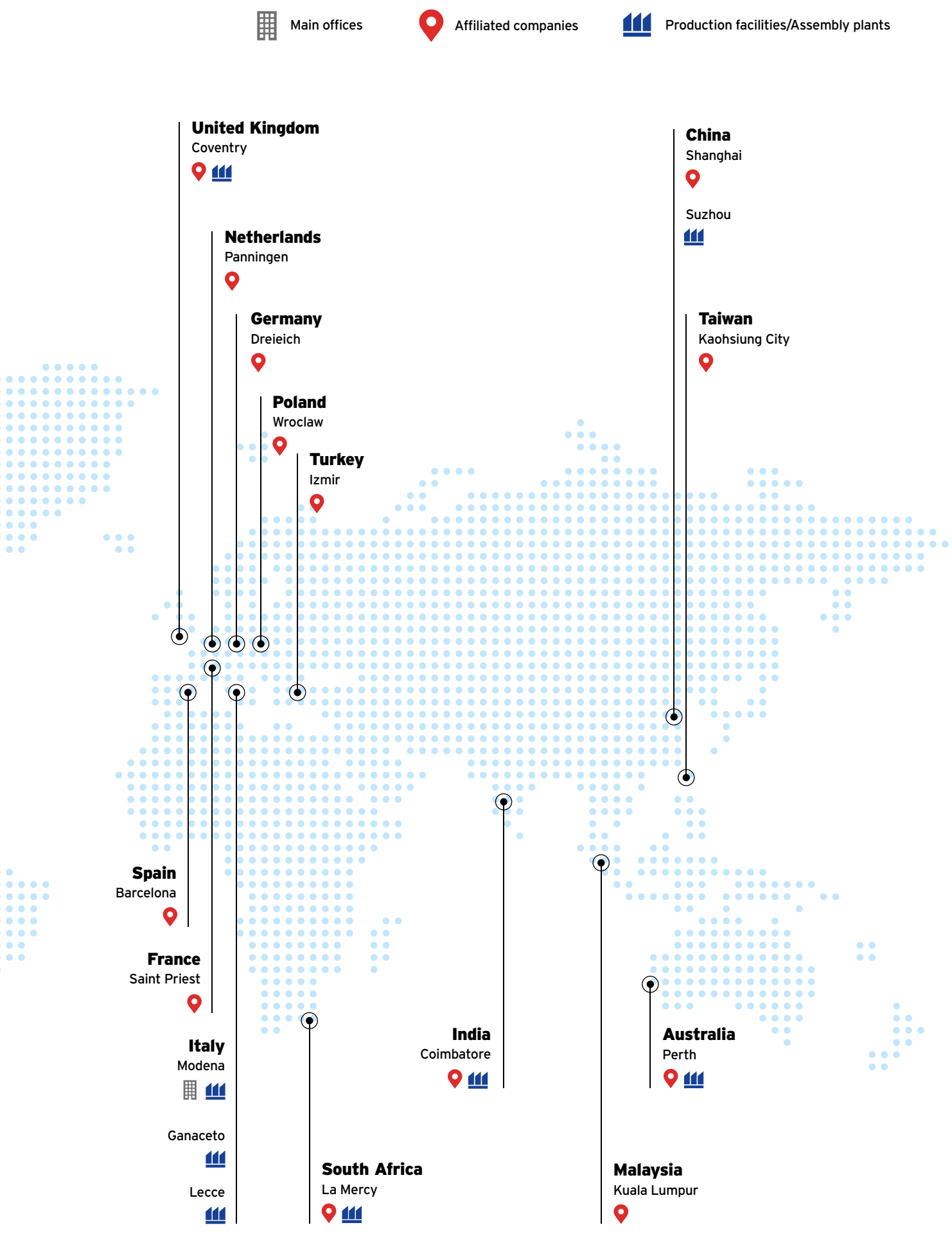
Main offices
Affiliated companies
Production facilities/Assembly plants
United Kingdom
Coventry
Netherlands
Panningen
Germany
Dreieich
Poland
Wroclaw
Turkey
Izmir
China
Shanghai
Suzhou
Taiwan
Kaohsiung City
Spain
Barcelona
France
Saint Priest
Italy
Modena
Ganaceto
Lecce
India
Coimbatore
South Africa
La Mercy
Malaysia
Kuala Lumpur
Australia
Perth

Who we are

Key figures

over **1,000** **people** around the world

5,000 **customers** worldwide

over **70** years of **experience**

50 million euros investments in new technologies and methodologies to improve manufacturing efficiency

17 **affiliated** companies

5 **production** facilities

8 **assembly** plants

18 **authorized** service centers

After-sale service

Highly trained mechanics and support teams can ensure a fast and efficient after-sale service providing support worldwide.

Rossi360+

Our new space is your gateway to a world of information, assistance, and seamless access to the solutions you need.
Whether you're an end user, distributor, or OEM partner you will find a personalized area to explore and manage all things related to your Rossi products.

Visit us at rossi.com

Quality

3 years warranty*

Our drive is to innovate and boost operations by manufacturing performing, precise, reliable and high-quality products all over the world. We are always one step forward in offering and developing solutions that can satisfy an unlimited number of application needs, even in the most demanding conditions.

* As per our warranty terms.



System certifications

ISO 9001:2015

ISO 14001:2015

ISO 45001:2023

Product certifications

UL

c UL us

EAC

CE

RoHS

TYPE APPROVED PRODUCT DNV DNV.COM/AF

Solutions for an evolving industry

Rossi S.p.A.
Via Emilia Ovest 915/A
41123 Modena - Italy

info@rossi.com
www.rossi.com

2654.CAT. EPWINCH.26.05-0-EN

© Rossi S.p.A. Rossi reserves the right to make any modification whenever to this publication contents. The information given in this document only contains general descriptions and/or performance features which may not always specifically reflect those described.

The Customer is responsible for the correct selection and application of product in view of its industrial and/or commercial needs, unless the use has been recommended by technical qualified personnel of Rossi, who were duly informed about Customer's application purposes. In this case all the necessary data required for the selection shall be communicated exactly and in writing by the Customer, stated in the order and confirmed by Rossi. The Customer is always responsible for the safety of product applications. Every care has been taken in the drawing up of the catalog to ensure the accuracy of the information contained in this publication, however Rossi can accept no responsibility for any errors, omissions or outdated data. Due to the constant evolution of the state of the art, Rossi reserves the right to make any modification whenever to this publication contents. The responsibility for the product selection is of the Customer, excluding different agreements duly legalized in writing and undersigned by the Parties.